NAVAL POSTGRADUATE SCHOOL
Monterey, California

ECE 3550 Fiber Optics Experiment 3A 8/2002 Po

FIBER COMMUNICATIONS LINKS

Purpose: In this experiment, we will examine fiber optic transmission of analog and digital data.

Equipment:

General purpose test equipment (signal generator, scope, multimeter, frequency counter, etc.)
Power supplies (± 5 volts, ± 15 volts, variable V^+)
Digital transmitter and receiver
Analog transmitter and receiver
Fiber cables with connectors for Digital and Analog systems
IR viewer
Digital camera

Procedure:

A. Analog system
A simple low power audio demonstration link is shown in Fig. 1.

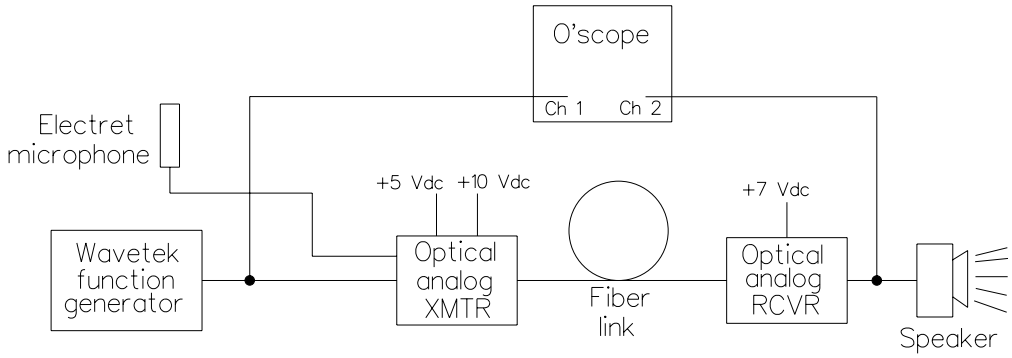

Figure 1: Analog fiber optic link.

Figure 2 shows the schematic diagram of the transmitter. With no modulation input voltage applied to the XMTR, the voltage level out of output of the LM386 is 1/2 of V_s. Analog signals with a plus and minus excursion will cause the voltage at this output to vary about $V_s/2$. The DC current through the LED (HFBR 1402) is desired to be about 25 mA with no signal. When a modulation signal is applied to the circuit, the current through the LED will vary about the DC operating point of 25 mA DC.

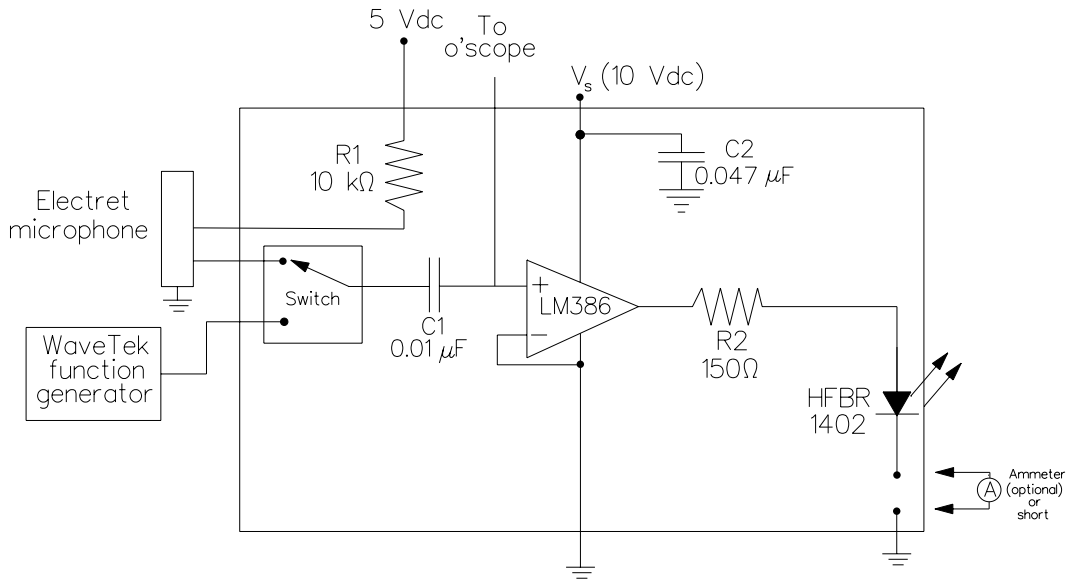

Figure 2: Schematic of analog-link transmitter.

The typical diode voltage specified by the manufacturer is 1.8 volts. For a supply voltage of $V_S = 5.0$ volts and $I_{\text{Bias}} = 25$ mA, the value of the resistor R_2 is chosen from the results of the following calculation:

$$R_2 = \frac{(V_s/2) - V_{\text{diode}}}{I_{\text{bias}}} = \frac{(10/2) - 1.8}{25 \times 10^{-3}} = 128\ \Omega\,. \tag{1}$$

We will use a resistor value of 150 Ω for R_2 and we will reduce the DC current down from 25 mA by reducing the value of the supply voltage.

The schematic for the receiver is shown in Fig. 3 on the following page. HFBR 2404 is a PIN photodiode with a preamplifier IC whose output is an analog signal. The LM386 is used as an audio amplifier, which is coupled to the speakers by the coupling capacitor, C_5.

1. Ensure that the system is set up as in Fig. 1. Familiarize yourself with all meter and test equipment controls.

2. On the transmitter, move the switch to the Microphone position and speak into the microphone. Adjust the volume at the receiver as required. Observe the received signal on the oscilloscope. (Be sure to turn on the switch located on the microphone, as well and beware of annoying feedback [coupling from the speakers into the microphone].) This system is an example of what kind of modulation scheme (AM, FM,...)?

3. On the transmitter, move the switch to the "Test Signal" position and apply a 1-kHz sine wave. Observe the received signal on the oscilloscope and record it with the camera. Vary the input frequency and observe the effect on the output.

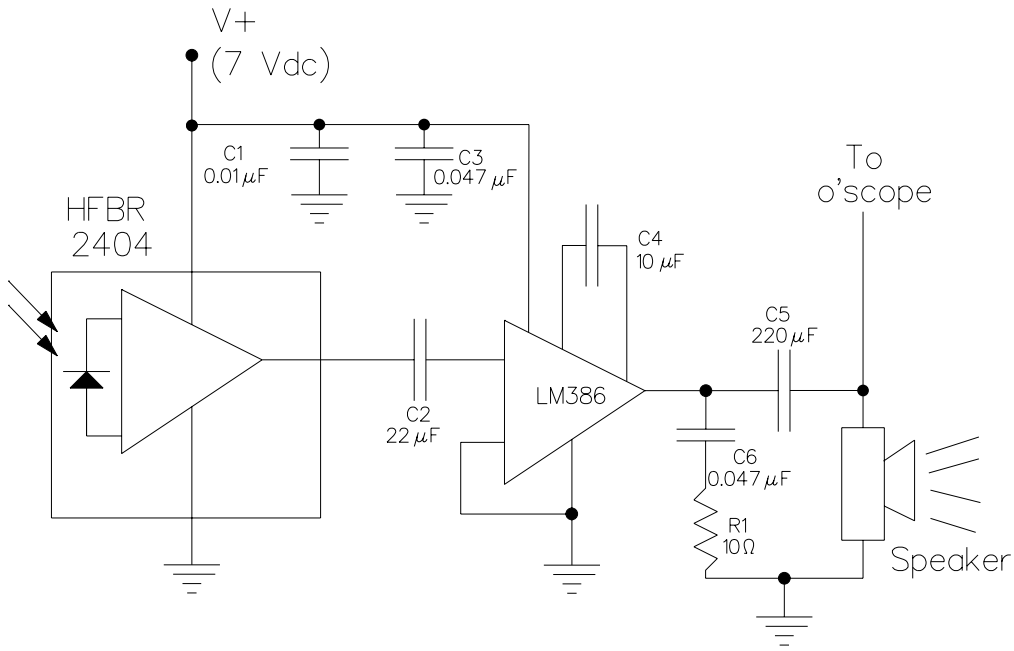

Figure 3: Schematic of analog-link receiver.

4. Return the test signal frequency to 1 kHz and reduce the supply voltage at the transmitter. Observe the DC current on the amp meter and the received signal on Channel 2 of the oscilloscope. Can you explain what you observe?

5. Adjust the supply voltage so that the DC diode current is approximately 20 to 25 mA.

6. Remove the 1 KHz tone. Remove the fiber from the XMTR and observe the LED with the IR viewer. Note that the LED is emitting with no signal applied. Why?

7. Reconnect the fiber to the XMTR and disconnect at the RCVR. Observe the light out of the fiber. Is there a perceived difference in intensity from step 6? Why?

8. Reapply the 1 KHz tone. Remove the XMTR end of the fiber after reconnecting the RCVR. Hold the fiber close to the LED and move the fiber longitudinally away from the source. Observe how far away the fiber can be and still capture enough light to obtain an output signal. Do the same with the receiver end. Also vary the axial alignment of the fiber with respect to the LED and the pin diode receiver. Which shows more sensitivity—the longitudinal displacement or the axial displacement? (The axial should.) Is there any difference in the sensitivity of the output level to the fiber/source and the fiber/detector displacements? Briefly explain your observations.

B. Digital System

Figure 4 on the next page shows a digital communications transmitter. Note that the HFBR 1402 LED is used here as well as in the analog circuit. SN75451 is an AND logic gate with an

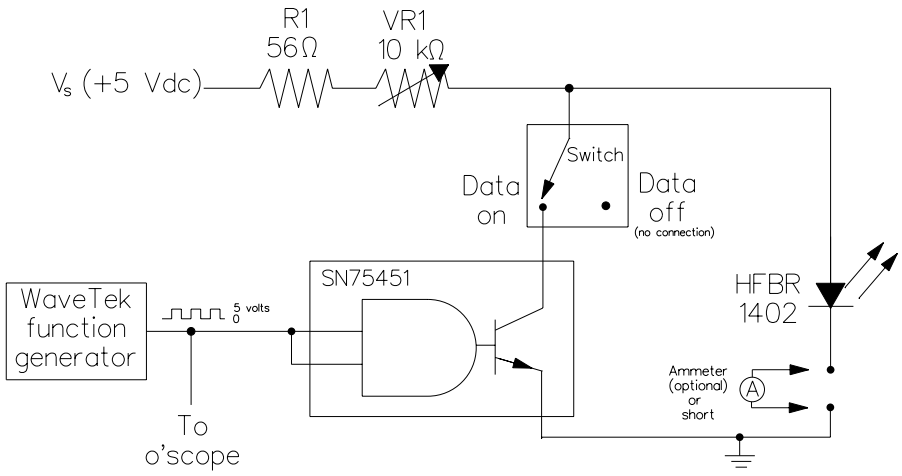

Figure 4: Schematic of digital fiber-optic transmitter.

NPN transistor at its output for use in TTL circuits. The LED is driven by the current from the supply when the transistor is OFF (i.e., no current through the collector of the transistor). When the transistor is ON, the collector is pulled to ground and no current flows through the LED, effectively turning it off.

The receiver circuit is shown in Fig. 5. The internal detector produces a current that triggers

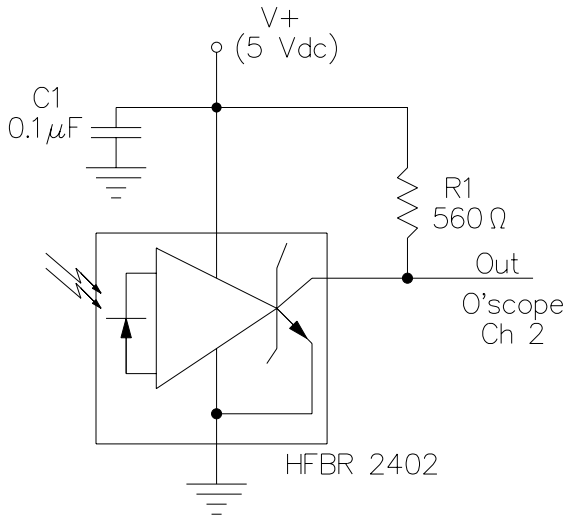

Figure 5: Schematic of digital receiver.

a logic gate. The output is HIGH or LOW, accordingly.

1. Ensure that the system is set up as in Figs. 4 and 5. Check all meter and test settings.
2. Apply a 200 kHz square wave to the transmitter. Adjust the DC offset at the function generator so that the logic LOW is at ground (or zero volts) and HIGH is at 5 volts. Observe the proper operation of the data link. Record an image with the digital camera.
3. Apply a 1 Hz square wave to the transmitter. Verify on Channel 1 of the oscilloscope that the signal toggles between 0 and 5 volts. Remove the fiber from the transmitter and observe the light at the transmitter with the IR viewer. Does the observation differ from the analog transmitter? Why?

Report: Each group should submit a brief (but complete) report summarizing its measurements. This report is due one week after completion of the laboratory exercise.

NAVAL POSTGRADUATE SCHOOL
Monterey, California

EC 3550 Fiber Optics Experiment 3B 8/2002 Po

LASER DIODE CHARACTERISTICS

Purpose: In this experiment, we will examine the operating characteristics of a laser diode at different temperatures and look at the optical spectrum of a Fabry-Perot diode laser and a distributed feedback (DFB) laser.

Equipment:

Melles Griot DLD103 Laser Diode Controller
Computer controller (with LabVIEW instrument control software)
Grabber2K freeware program (for screen grabs)
Laser diode mount
Laser Diode Inc. SCW-1302 1300-nm laser diode (with fiber pigtail)
ILX OMM-6810 Optical Multimeter
HP70951B Optical Spectrum Analyzer
BCP Laser Transmitter (Model 400A)
BCP High-Speed DFB Laser Transmitter (Model 410A)

Caution: Laser diodes are intolerant of abuse. The following conditions can cause destruction of the diode: reverse bias voltage (instead of forward bias), sudden application of a nonzero forward bias, exceeding the maximum drive current, operation at high temperatures, etc. The laser controller is designed to avoid all of these destructive operating conditions, but only if operated in accordance with the instructions of this procedure. These 1300-nm diodes cost several hundred dollars each; so please be careful.

Introduction:

The laser diode package contains the laser diode, a thermoelectric cooler to control the diode operating temperature, a thermistor to sense the diode temperature, a photodiode to sense the relative power emitted by the diode, and a precision-aligned fiber pigtail. The Melles Griot laser controller has inputs to sense the temperature (via the thermistor) and to control the thermoelectric cooler to increase or decrease the diode temperature. Using feedback, the diode temperature can be set and controlled with the controller. The photodiode in the laser package senses the optical power emitted at the rear facet of the diode laser. Since this power is proportional to the laser power in the output pigtail, it can be used to detect changes in relative power. With a single calibration measurement, the photodiode output can be used to measure the output power in the fiber pigtail. With feedback, the photodiode output can be used to maintain constant power over time and/or environmental temperature changes.

The Melles Griot laser controller has a GPIB (general-purpose instrument bus), allowing computer control of the instrument. LabVIEW is a commercial instrumentation-control software package for controlling instruments accessible with the GPIB bus, taking measurements, and manipulating the data. We have written a program (called "Laser Diode Lab 3b.vi") to control the diode laser controller from the computer and to perform some of the measurements needed for this experiment.

Procedure:

A. Power vs. drive current characteristics

1. Ensure that the laser diode controller is tuned off.

2. Ensure that the fiber pigtail from the diode laser is connected to the power meter sensor head. *Do <u>not</u> open any connections while the laser is on!! This is a safety violation. Eye damage may result from looking at the end of the fiber connector at a close distance. The light is invisible and you won't be aware that your eyes are being irradiated.*

3. The computer should be turned on and ready to use. (If not, have one of the lab personnel start the computer and log in as "Administrator" so that the LabView, BenchLink, and Grabber2K programs are available for use.

4. Double-click on the Grabber2K icon to start the program. The program's icon will appear in the in the icon tray in the lower right corner of the display. To save a screen image as directed later in the procedure, press "PrntScrn" on the upper right center of the keyboard. A JPEG file of the screen will be created and saved with a default name in the "C:Grabber2K" directory. After you finish the lab, either save these images on a floppy disk or move them to your "H:" drive (after logging out and relogging in as yourself).

5. Double-click on the icon for "Laser Diode Lab 3b.VI" to open the LabView program that operates the Melles Griot Laser Controller and the OMM-6810 Optical Multimeter. LabVIEW will start up and place you in the control program.

6. You are now ready to set up the diode controller as follows.

   (a) Turn on the laser diode controller. It will go through a brief self-test. After completing the self-test, it will display a screen full of information on its present settings (saved from the last time it was turned off), indicate that the self-test was passed OK, and invite you to press any key to continue.

   (b) Press the "SAVE/RCL" button. (It is located just above the "9" button on the numerical keypad of the diode laser controller.)

   (c) The screen should now display the "Save Recall Menu". Push the leftmost button under the screen label "Action" until the "Recall" command is highlighted. (One button push should suffice.)

   (d) Push the second button from the left to "Recall DLD103 setup" (previously stored in memory). The screen should then show a list of several previously stored setups.

   (e) Push the "Press to select next item" button until the "EC3550" item is highlighted.

   (f) Push the "Press to recall setup" button to load the setup. The laser controller will perform a warm reset and will eventually display the initial screen showing the operating parameters from the recalled setup and inviting you to "Press any key to continue".

   (g) Press any of the keys *below* the screen. The screen will change and will display the "Mode Menu".

(h) We now want to turn on the thermoelectric cooler control. Press the right button below the screen (under the TEC heading) to highlight "ON". You should observe the temperature reading and the "Itec" reading (both are at the top of the screen) start to fluctuate as the cooler controller functions. Eventually the temperature will stabilize. (The temperature stabilizes at a temperature that is slightly above the set temperature [shown at the bottom of the screen]. This is because the manufacturer of the diode laser provides typical calibration data for the thermistor in the laser package. Exact data for the thermistor in the device is not available. Thus, we will set the temperature for a desired value, but the actual operating value will be a bit higher. You should record the measured temperature.)

(i) Check again that the TEC cooler is "ON". (The word "ON" in the lower right corner of screen should be highlighted.) *Do not proceed further if the cooler is off!! You will destroy the diode laser!!*

7. Turn on the OMM-6810 Multimeter.

8. Returning to the computer, the operating instructions are displayed in the lower-left corner of the screen. Read these directions.

   (a) You will use the virtual controls to set operating temperature to the desired values (as detailed below).

   (b) When you are satisfied with the settings of "operating temperature", start the VI program by clicking the "RUN" icon. (This icon is a right-pointing arrow.)

9. We will measure and record the operating curves of the laser diode at four different temperatures.

   (a) Start the *Laser Diode Lab 3b.vi* program (if you have not already done so).

   (b) Using the "Temp Set" virtual control knob and the mouse, set the desired operating temperature of the diode to 10C.

   (c) Click on the "Run" icon under the menu bar (or use the "OPERATE, RUN" menu commands).

   (d) You should observe that the diode controller screen shows that current is being applied to the cooler and the operating temperature is changing. Once the operating temperature stabilizes, the diode controller applies increasing current (in 1 mA steps) to the laser until the maximum current value is reached. The data is plotted on the screen as it is measured. (You should see a typical laser diode output curve. If in doubt, check with the lab technician. Note that the maximum laser power, the measured laser wavelength, and the measured diode temperature are also recorded on the screen.

   (e) Record the screen image to the hard drive using Grabber2K.

   (f) Clear the screen plot. (See instructions on the screen, below the plot.)

   (g) Repeat the procedure for temperatures of 10C, 15C, 20C and 25C, recording each screen.

10. Turn-off procedure: Turn off the laser diode controller (with its key-switch) first, before closing the "Lab 3b.vi" window on the computer and the OMM-6810 Optical Multimeter.

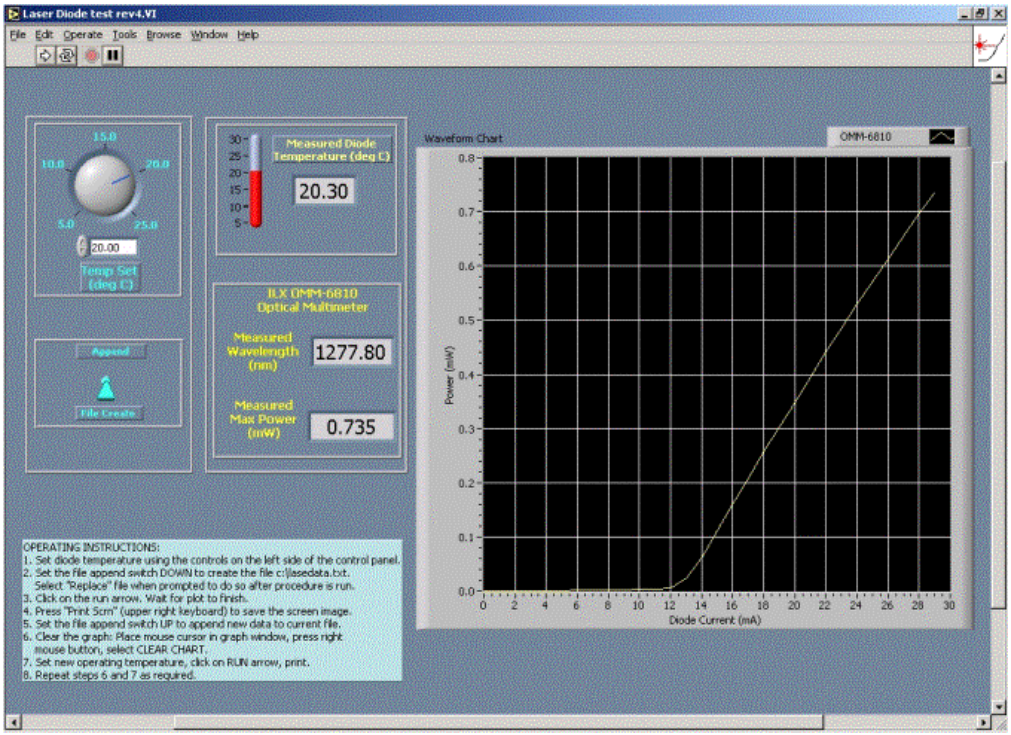

Figure 1: Representative screen printout.

11. From your plots, find the approximate threshold current at each temperature and the incremental efficiency above threshold.

12. Prepare a table of results indicating the measured wavelength, the maximum power, the estimated threshold current, and computed incremental efficiency at each of the four measured operating temperatures.

13. The equation describing the temperature effects on a laser diode is

$$I_{\mathrm{th}} = I_0 \exp\left(T/T_0\right) , \tag{2}$$

where I_0 and T_0 are parameters associated with the diode. The T_0 parameter depicts the temperature sensitivity of the diode, with lower values being less sensitive. Using your measured values of I_{th} and T, find estimates for the values of T_0 and, then, I_0 for your diode. (Be sure to clearly describe your method for finding these parameters.)

14. Plot on semilog paper both the theoretical threshold current vs. temperature (using your calculated parameters, I_0 and T_0) and the four measured data points.

B. Laser Spectrum

In this part of the experiment we will measure the laser spectrum using an optical spectrum analyzer (OSA). We are particularly interested in the nominal operating wavelength, λ, and the spectral width, $\Delta\lambda$, of the laser for both a Fabry-Perot laser diode and a distributed-feedback (DFB) laser.

1. If necessary, turn on the optical spectrum analyzer.

2. On the computer, close the "diodplot" window and double-cleck on the "BenchLink" icon. BenchLink (a program to record data from the spectrum analyzer) will initiate. (If the program cannot find a device, be sure the spectrum analyzer is on and press search. The program should find the spectrum analyzer at address 23 and the color display at address 4. Highlight both and press OK; BenchLink should be ready to acquire screen images.

3. Connect the Model 400A laser transmitter to the OSA with a fiber cable. (You may need to clean the transmitter end of the fiber with alcohol.)

4. On the OSA, press the "INSTR PRESET" button (above screen to the right) and the "AUTO MEASURE" button (lower left). When the screen indicates that the automeasure is complete, press the "USER" button (under center of screen) and then the "FP" softkey (to the right of the screen). The OSA will show the spectrum of the laser and associated measurements. Push the "Single sweep" softkey on the upper right of the screen; the OSA will perform a single measurement and the readings will stabilize.

5. After ensuring that the display has stabilized, go to the "Image" menu on BenchLink and acquire an image of the screen. (A short progress bar will show your transfer progress.) The screen display on the spectrum analyzer will appear on the computer screen. Use the Grabber2K program to save the screen image for electronic pasting into your lab report.

6. Turn off the Model 400 transmitter and repeat the measurement for the Model 410 DFB Laser transmitter. (In step 3, you will need to press the "DFB" softkey instead of the "FP" softkey.)

7. Report on the important operating parameters of each laser.

Report: Each group should submit a brief report summarizing its measurements. This report is due one week after completion of the laboratory exercise.