NAVAL POSTGRADUATE SCHOOL
Monterey, California

EC 3550 FINAL EXAM 12/98 Prof. Powers

- This exam is open book and notes.
- There are four problems; each is equally weighted.
- Partial credit will be given; be sure to do some work on each problem.
- Be sure to include units in your answers.
- Please circle or underline your answers.
- Show *ALL* work.
- Write only your name on this sheet.
- Exams and course grades *should* be available outside the Optical Electronics Laboratory (Bu 224) on **Wednesday afternoon, 16 December**.
- Have a good holiday season and enjoy your break!
- The originals or copies of this exam and/or its solutions are *not* to be given or lent to anyone else.

Course grade: _____

1		3	
2		4	
TOTAL			

Name: _____

IMPORTANT: Specifications of numbered components used in problems 1–3 are given in the tables on page 4. Specifications for the components of the link in Problem 4 are given on pages 2 and 3.

1. Calculate the maximum data rate-distance product (in units of Gb·s^{-1}·km) for fiber #3 when used with laser #4.

---

2. Laser #2 is to be used in a 2.5 Gb/s link (NRZ coding) with Detector #2 operated with $M = 1$. The total losses of the link are 28.6 dB. Assuming that the detector performance is limited by the shot noise associated with the detector bulk dark current, find the expected bit error rate of the link.

---

3. Detector #1 is operated at 850 nm with a gain of 150. The signal bandwidth is 500 MHz.
   (a) Calculate the noise-equivalent power (NEP) of this detector assuming that the signal-dependent shot noise is dominant.
   (b) Using the result of the previous part, calculate the value of R_L required to make the thermal noise equal to 1/100 of the signal-dependent shot noise when the NEP is incident on the detector. (The noise temperature of the detector is 390K.)

---

4. Consider the fiber link shown in Fig. 1. The data for the link components is as shown on page 4. If the link length is 50 km, find the maximum allowable data rate of "Signal In #2" as determined by the losses.

Source Specs for Prob. 4.

Parameter	XMTR #1	XMTR #2
λ	1300 nm	1550 nm
Power	1 mW	1 mW
$\Delta\lambda$	8 nm	2 nm

Fiber Specs for Prob. 4.

Parameter	Value
Dimensions	9/125 μm
Type	Single-mode
Losses	0.45 dB/km at 1300 nm
	0.35 dB/km at 1550 nm
Dispersion (total)	0.25 ps·km^{-1}·nm^{-1} at 1300 nm
	15.0 ps·km^{-1}·nm^{-1} at 1550 nm
Aging allowance	0.03 dB/km

Coupler Specs for Prob. 4.

Parameter	Coupler value
Splitting loss	3 dB
Excess loss (each channel)	1 dB

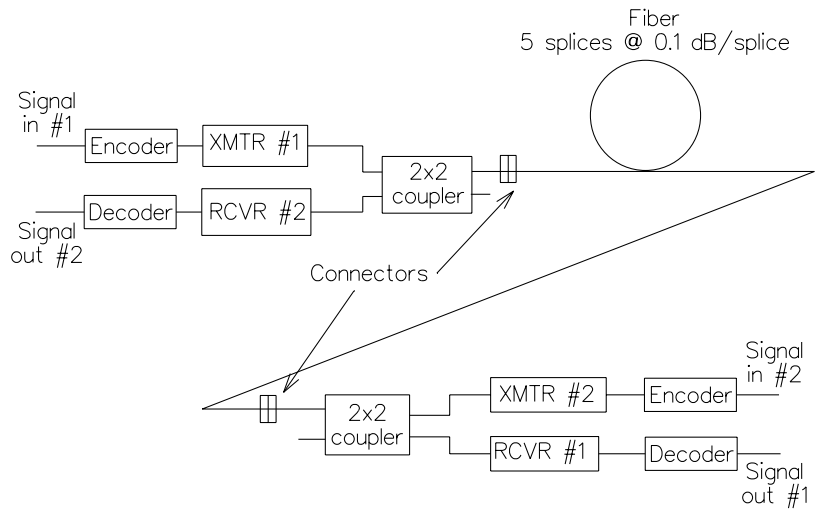

Figure 1: System for Problem 4.

Receiver sensitivity (power required for BER of 10^{-9}): $P_R = 11.5\log(\mathrm{B_R}) - 60.5$ dBm where P_R is *in dBm* and B_R is the baud rate *in Mb/s*.

Coding: RZ, Manchester encoding

Connector losses: 3 dB (per pair)

Splice loss: 0.1 dB per splice

FIBER SPECIFICATIONS

	Fiber #1	Fiber #2	Fiber #3	Fiber #4
Size	50/125	62.5/125	8/125	100/140
n_1	1.45	1.46	1.45	1.46
g	1.88	∞	∞	1.85
NA	0.22 (at $r = 0$)	0.20	0.10	0.18 (at $r = 0$)
α @ 850 nm	2.0 dB/km	1.0 dB/km	1.2 dB/km	5.0 dB/km
α @ 1300 nm	1.0 dB/km	0.8 dB/km	0.7 dB/km	2.0 dB/km
α @ 1550 nm	0.6 dB/km	0.4 dB/km	0.4 dB/km	0.8 dB/km

SOURCE SPECIFICATIONS

	Laser #1	Laser #2	LED #3	Laser #4
Wavelength	850 nm	1300 nm	850 nm	1550 nm
$\Delta\lambda$	0.5 nm	1.0 nm	25 nm	0.1 nm
Power at pigtail end	0.70 mW	0.8 mW	60 μW	3.0 dBm
Pigtail size	62.5/125 μm	10/125 μm	200/300 μm	8/125 μm
Pigtail NA	0.20	0.12	0.25	0.10
Pigtail type	Step index	Step index	Step index	Step index

DETECTOR SPECIFICATIONS

	Detector #1	Detector #2	Detector #3
Material	Silicon	Germanium	InGaAs
Responsivity A/W @ $M = 1$	0.8 @ 850 nm	0.2 @ 1300 nm 0.3 @ 1550 nm	0.3 @ 1300 nm 0.45 @ 1550 nm
C_d	3 pF	1 pF	2 pF
Excess noise factor	$M^{0.3}$	M^{1}	$M^{0.6}$
Bulk dark current	0.10 pA	1 μA	0.1 μA
Surface dark current	0	1 nA	0