DATA SHEET

LIGHTGUIDE
Apparatus

ST® Series Multimode Fiber Optic Connectors

Use

Cable-to-cable, cable-to-equipment or equipment-to-equipment multimode, single-fiber connections.

Application

- *Local Area Networks*
- *Computer Backplane Connections*
- *Computer Peripheral Interconnection*
- *Telecommunications Networks*
- *Premises Distribution*

Features

- *Low Loss (<1dB)*
- *Small Size (Approx. SMA)*
- *Low Cost*
- *Easy and Quick to Mount*
- *Flex Ferrule Coupling*
- *Rugged*
- *Stable Performance*
- *Keyed, Bayonet Latch*

Only the ST® Series family of fiber optic connectors incorporates the patented Flex Ferrule sleeve coupling and precision plug. The flexible split-sleeve coupling assures evenly distributed force to hold the connector plugs. The plug tip accurately positions the fiber, while maintaining its shape over a wide range of temperatures and humidity. This combination yields a rugged, low-loss connection with stable, repeatable performance at low cost.

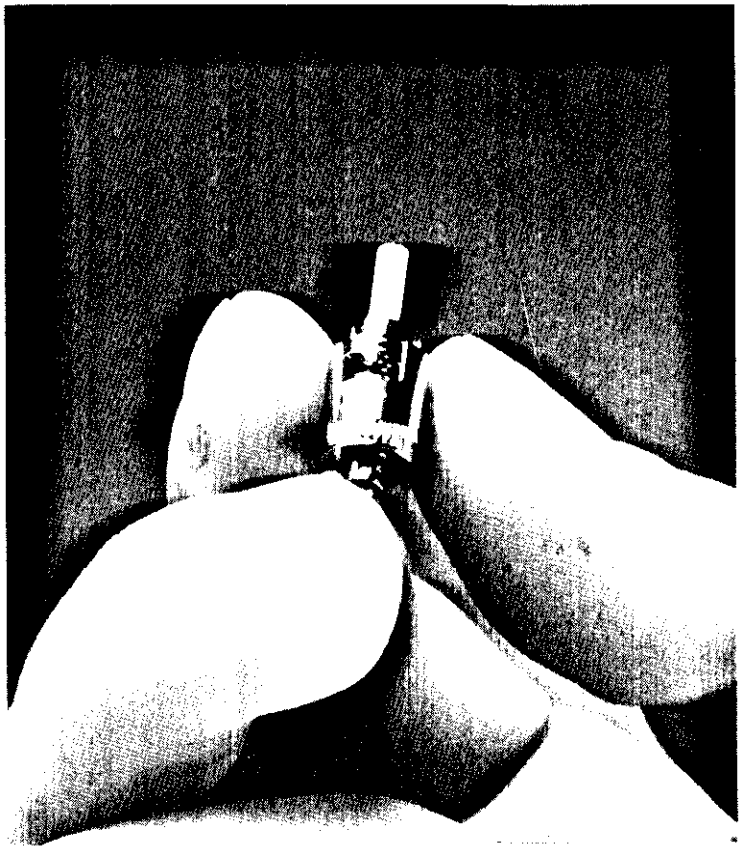

P2020A-C-125 shown

The ST Series Connectors are available factory-mounted on 1860 Series Cable (62.5/125) or may be field mounted.

The 1032A Tool Kit contains all the tools, consumables (except alcohol and compressed air), and instructions needed to easily and quickly mount about 100 ST Series Connectors on 1860 Series Cable in the field (110 VAC required).

The D-181338 Kit contains replacement consumables used in the 1032A Tool Kit.

ST® is a trademark of AT&T.

AT&T

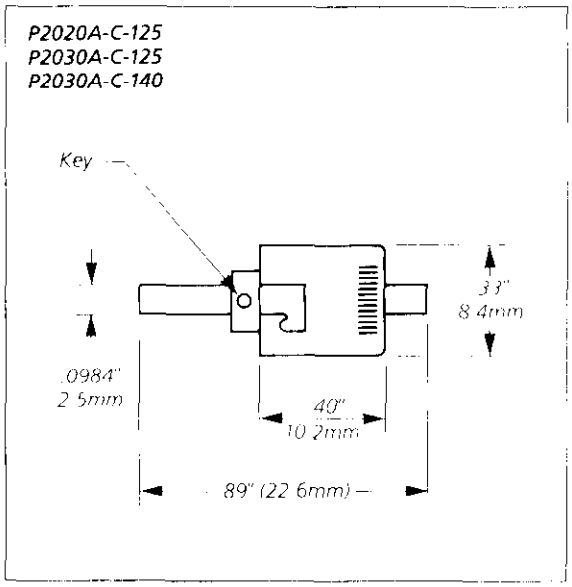

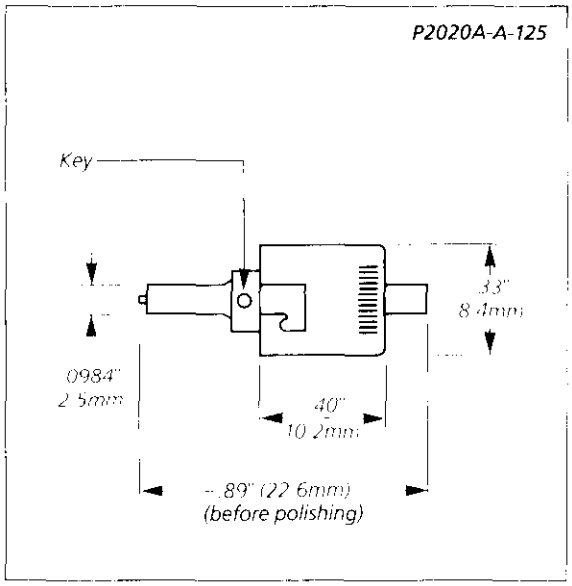

SPECIFICATIONS

Connector	P2020A-C-125	P2030A-C-125	P2030A-C-140	P2020A-A-125
Loss[1]: μ,σ	0.4dB, 0.2dB	0.4dB, 0.2dB	0.4dB, 0.2dB	0.9dB, 0.3dB
Fiber OD, nom.	125μm	125μm	140μm	125μm
Cable OD, nom.	2.4mm	3.0mm	3.0mm	2.4mm
Loss repeat.	<0.2dB 1000 reconnects	<0.2dB 1000 reconnects	<0.2dB 1000 reconnects	<0.2dB 200 reconnects
Axial Load, [2], min.	35 lbs.	35 lbs.	35 lbs.	35 lbs.
Temp. Stab. (—20°C to 60°C)	±0.1dB max. change	±0.1dB max. change	±0.1dB max. change	±0.1dB max. change
Materials				
Tip	ceramic	ceramic	ceramic	reinf. thermoset plastic
Cap	Zamak #3, Ni Plated	Zamak #3, Ni Plated	Zamak #3, Ni Plated	Zamak #3, Ni Plated
Body	Zamak #3, Ni Plated	Zamak #3, Ni Plated	Zamak #3, Ni Plated	Zamak #3, Ni Plated
Mount Time				
One	16 min.	16 min.	16 min.	16 min.
Twelve	6 min., av.	6 min., av.	6 min., av.	6 min., av.

[1]Complete connection, concatanated statistics. 62.5/125 fiber, .29NA, ovality and concentricity equivalent to 1860A Cable (Except for P2030A-C-140). Dry connection.
[2]Cable dependent; to cause permanent light transmission failure. Figures representative of use with AT&T 1860A cordage or equivalent.

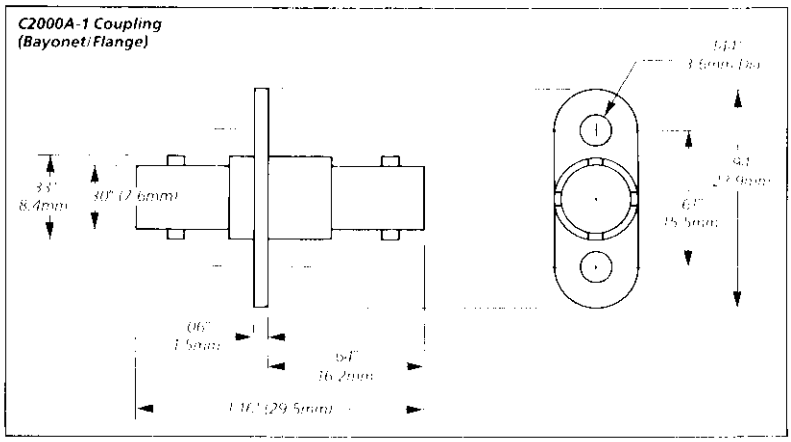
C2000A-1 Coupling
(Bayonet/Flange)
33"
8.4mm
30" (7.6mm)
06"
1.5mm
54"
36.2mm
1.16" (29.5mm)
63"
15.5mm

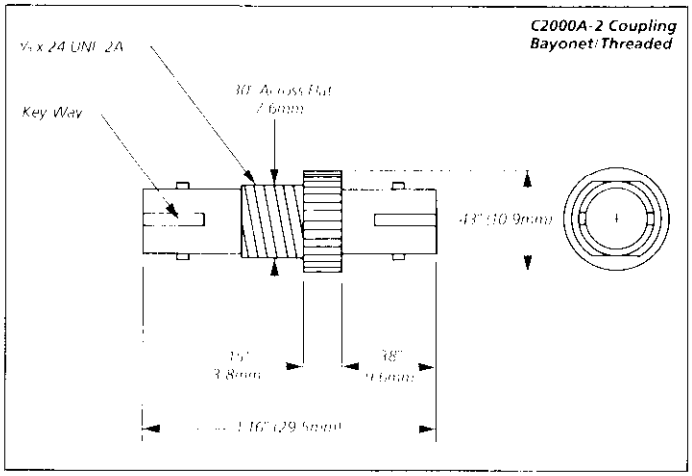
C2000A-2 Coupling
Bayonet/Threaded
Key Way
30" Across Flat
7.6mm
43" (10.9mm)
15"
3.8mm
38"
1.16" (29.5mm)

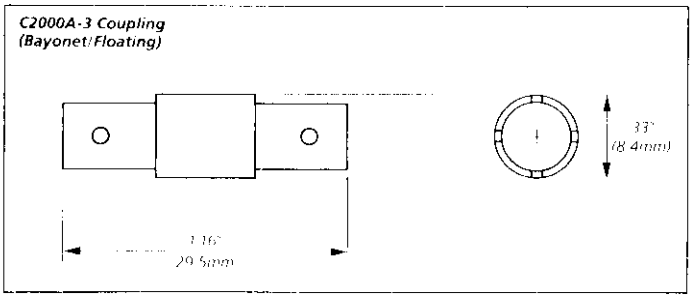
C2000A-3 Coupling
(Bayonet/Floating)
33"
(8.4mm)
1.16"
29.5mm

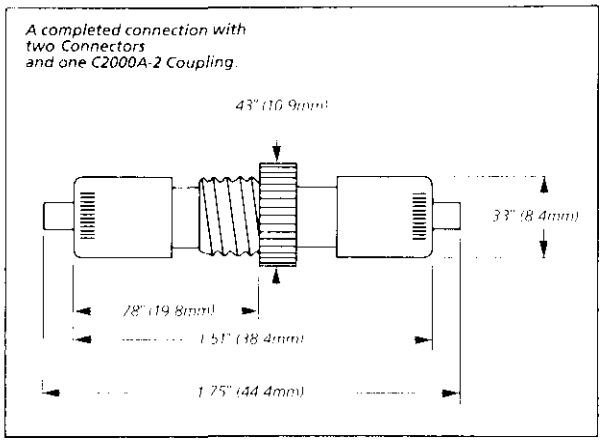
A completed connection with
two Connectors
and one C2000A-2 Coupling.
43" (10.9mm)
33" (8.4mm)
78" (19.8mm)
1.51" (38.4mm)
1.75" (44.4mm)

ORDERING INFORMATION

Order by code and comcode.

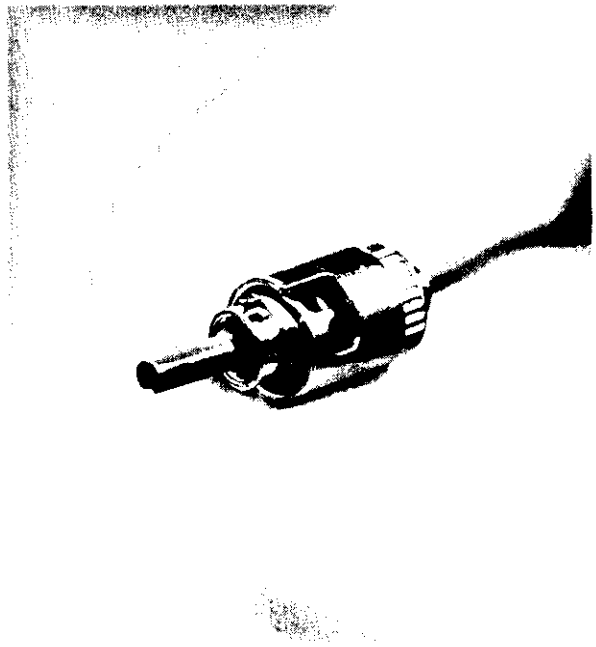

P2020-A-A-125

Connector Plugs

Style	Code	Comcode
2.4mm/Ceramic	P2020A-C-125	104 148 002
2.4mm/Plastic	P2020A-A-125	105 218 333
3.0mm/Ceramic	P2030A-C-125	105 240 790
3.0mm/Ceramic	P2030A-C-140	105 240 808

Connector Couplings

Style	Code	Comcode
Bayonet/Flange	C2000A-1 Coupling	104 148 010
Bayonet/Threaded	C2000A-2 Coupling	104 148 028
Bayonet/Floating	C2000A-3 Coupling	104 148 036

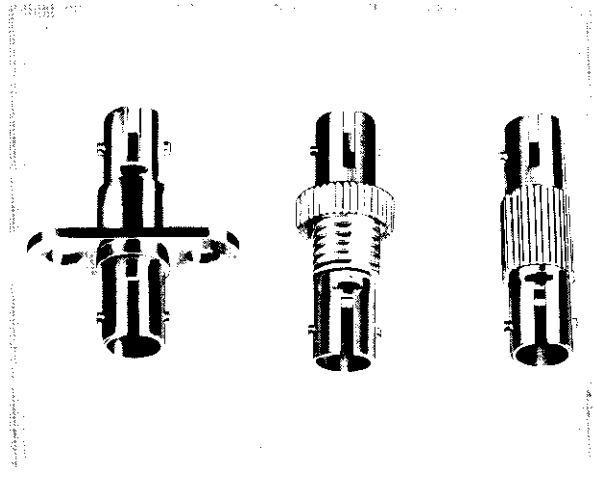

C2000A-1 C2000A-2 C2000A-3

Tools/Accessories

	Code	Comcode
Field Mounting Kit	1032A Tool Kit	103 808 416
Replacement Consumables	D-181338 Kit	104 219 761
Supplemental Tools (plastic)	D-181618 Kit	105 246 185
Supplemental Tools (3.0mm)	D-181621 Kit	105 249 346

For more information, please contact your AT&T Representative or call 1-800-372-2447.
For technical assistance on Lightguide Fiber Optics, please call 1-800-824-1931.
For information on Lightguide Systems Training, please call 1-800-TRAINER.

AT&T
The right choice.

AT&T Technologies, Inc. reserves the right to make changes to the product(s) described in this document in the interest of improving internal design, operational function, and/or reliability. AT&T Technologies, Inc. does not assume any liability which may occur due to the use or application of the product(s) or circuit layout(s) described herein.

©1986 AT&T Technologies, Inc.
All Rights Reserved
Printed in USA

AT&T Network Systems
Marketing Communications
2330D-JED-K86