Agilent Technologies
Innovating the HP Way

Small Form Factor MT-RJ Fiber Optic Transceivers for Gigabit Ethernet

Technical Data

HFBR-5912E,
850 nm VCSEL
HFCT-5912E,
1300 nm FP Laser

Features

- **Compliant with Specifications for IEEE 802.3z/ Gigabit Ethernet**
- **Multisourced 2 x 5 Package Style with Integral MT-RJ Connector**
- **Performance**
  HFBR-5912E (1000 Base-SX)
  - **220 m Links in 62.5/125 µm MMF 160 MHz*km Cables**
  - **275 m Links in 62.5/125 µm MMF 200 MHz*km Cables**
  - **500 m Links in 50/125 µm MMF 400 MHz*km Cables**
  - **550 m Links in 50/125 µm MMF 500 MHz*km Cables**

  HFCT-5912E (1000 Base-LX)
  - **550 m Links in 62.5/125 µm MMF Cables**
  - **10 km Links in 8/125 µm SMF Cables**
- **IEC 60825-1 Class 1/CDRH Class 1 Laser Eye Safe**
- **Single +3.3 V Power Supply Operation with PECL Logic I/O Interfaces, TTL Signal Detect and Transmit Disable**
- **Wave Solder and Aqueous Wash Process Compatible**

Applications

- **Switch to Switch Interface**
- **Switched Backbone Applications**
- **High Speed Interface for File Servers**
- **High Performance Desktops**

Related Products

- **Physical Layer ICs Available for Optical or Copper Interface (HDMP-1636A/ 1646A)**
- **Quad SERDES IC Available for High Density Interfaces (HDMP-1680)**
- **1x9 Fiber Optic Transceivers for Gigabit Ethernet (HFBR/HFCT-53D5)**
- **Gigabit Interface Converters (GBIC) for Gigabit Ethernet**
  SX – HFBR-5601
  LX – HFCT-5611

Description

The HFBR/HFCT-5912E transceiver from Agilent allows the system designer to implement a range of solutions for multimode and single mode Gigabit Ethernet applications.

The transceivers are configured in the new multisourced industry standard 2 x 5 dual-in-line package with an integral MT-RJ fiber connector.

Transmitter Section
The transmitter section of the HFBR-5912E consists of an 850 nm Vertical Cavity Surface Emitting Laser (VCSEL) in an

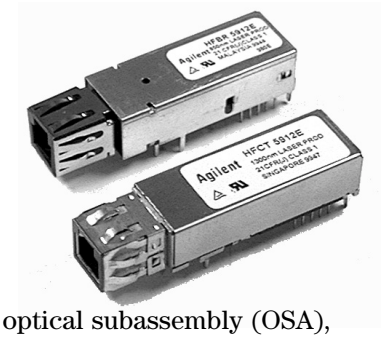

optical subassembly (OSA), which mates to the fiber cable. The HFCT-5912E incorporates a 1300 nm Fabry-Perot (FP) Laser designed to meet the Gigabit Ethernet LX specification. The OSA is driven by a custom silicon bipolar IC which accepts differential PECL logic signals (ECL referenced to a +3.3 V supply) and provides bias and modulation control for the laser.

Receiver Section
The receiver of the HFBR-5912E includes a GaAs PIN photodiode mounted together with a custom, silicon bipolar transimpedance preamplifier IC in an OSA. This OSA is mated to a custom silicon bipolar circuit that provides post-amplification and quantization. The HFCT-5912E utilizes an InP PIN photodiode in a similar configuration.

The post-amplifier also includes a Signal Detect circuit which provides a TTL logic-high output upon detection of an optical signal.

APPLICATION SUPPORT

Package and Handling Instructions

Flammability

The HFBR/HFCT-5912E transceiver housing consists of high strength, heat resistant, chemically resistant, and UL 94 V-0 flame retardant plastic and metal packaging.

Recommended Solder and Wash Process

The HFBR/HFCT-5912E is compatible with industry-standard wave or hand solder processes.

Process plug

This transceiver is supplied with a process plug for protection of the optical port within the MT-RJ connector receptacle. This process plug prevents contamination during wave solder and aqueous rinse as well as during handling, shipping and storage. It is made of a high-temperature, molded sealing material that can withstand +80°C and a rinse pressure of 110 lbs per square inch. Due to the differences in the multimode and single mode connector construction, the HFBR-5912E and HFCT-5912E process plugs are different and not interchangeable. The multimode port plug is black and the single mode variant is a blue color.

Recommended Solder fluxes

Solder fluxes used with the HFBR/HFCT-5912E should be water-soluble, organic fluxes. Recommended solder fluxes include Lonco 3355-11 from London Chemical West, Inc. of Burbank, CA, and 100 Flux from Alpha-Metals of Jersey City, NJ.

Recommended Cleaning/ Degreasing Chemicals

Alcohols: methyl, isopropyl, isobutyl.
Aliphatics: hexane, heptane
Other: naphtha.

Do not use partially halogenated hydrocarbons such as 1,1.1 trichloroethane, ketones such as MEK, acetone, chloroform, ethyl acetate, methylene dichloride, phenol, methylene chloride, or N-methylpyrolldone. Also, Agilent does not recommend the use of cleaners that use halogenated hydrocarbons because of their potential environmental harm.

Regulatory Compliance

(See the Regulatory Compliance Table for transceiver performance) The overall equipment design will determine the certification level. The transceiver performance is offered as a figure of merit to assist the designer in considering their use in equipment designs.

Electrostatic Discharge (ESD)

There are two design cases in which immunity to ESD damage is important.

The first case is during handling of the transceiver prior to mounting it on the circuit board. It is important to use normal ESD handling precautions for ESD sensitive devices. These pre-cautions include using grounded wrist straps, work benches, and floor mats in ESD controlled areas. The transceiver perform-ance has been shown to provide adequate performance in typical industry production environments.

The second case to consider is static discharges to the exterior of the equipment chassis containing the transceiver parts. To the extent that the MT-RJ connector receptacle is exposed to the outside of the equipment chassis it may be subject to whatever system-level ESD test criteria that the equipment is intended to meet. The transceiver performance is more robust than typical industry equipment requirements of today.

Electromagnetic Interference (EMI)

Most equipment designs utilizing these high-speed transceivers from Agilent will be required to meet the requirements of FCC in the United States, CENELEC EN55022 (CISPR 22) in Europe and VCCI in Japan. Refer to EMI section (page 5) for more details.

Immunity

Equipment utilizing these transceivers will be subject to radio-frequency electromagnetic fields in some environments. These transceivers have good immunity to such fields due to their shielded design.

Eye Safety

These laser-based transceivers are classified as AEL Class I (U.S. 21 CFR(J) and AEL Class 1 per EN 60825-1 (+A11). They are eye safe when used within the data sheet limits per CDRH. They are also eye safe under normal operating conditions and under all reasonably foreseeable single fault conditions per EN60825-1. Agilent has tested the transceiver design for compliance with the requirements listed below under normal operating conditions and under single fault conditions where applicable. TUV Rheinland has granted certification to these transceivers for laser eye safety and use in EN 60950 and EN 60825-2 applications. Their performance enables the transceivers to be used without concern for eye safety up to 5.0 V transmitter V_{CC}.

CAUTION:
There are no user serviceable parts nor any maintenance required for the HFBR/HFCT-5912E. All adjustments are made at the factory before shipment to our customers. Tampering with or modifying the performance of the HFBR/HFCT-5912E will result in voided product warranty. It may also result in improper operation of the HFBR/HFCT-5912E circuitry, and possible overstress of the laser source. Device degradation or product failure may result.

Connection of the HFBR/HFCT-5912E to a non-approved optical source, operating above the recommended absolute maximum conditions or operating the HFBR/HFCT-5912E in a manner inconsistent with its design and function may result in hazardous radiation exposure and may be considered an act of modifying or manufacturing a laser product. The person(s) performing such an act is required by law to recertify and reidentify the laser product under the provisions of U.S. 21 CFR (Subchapter J).

Optical Power Budget and Link Penalties

The worst-case Optical Power Budget (OPB) in dB for a fiber-optic link is determined by the difference between the minimum transmitter output optical power (dBm avg) and the minimum receiver sensitivity (dBm avg). This OPB provides the necessary optical signal range to establish a working fiber-optic link. The OPB is allocated for the fiber-optic cable length and the corresponding link penalties. For proper link performance, all penalties that affect the link performance must be accounted for within the link optical power budget. The Gigabit Ethernet IEEE 802.3z standard identifies, and has modeled, the contributions of these OPB penalties to establish the link length requirements for 9/125 µm single mode and 50/125 µm and 62.5/125 µm multimode fiber usage. Refer to the IEEE 802.3z standard and its supplemental documents that develop the model, empirical results and final specifications.

Regulatory Compliance

Feature	Test Method	Performance
Electrostatic Discharge (ESD) to the Electrical Pins	MIL-STD-883C Method 3015.4	Class 1 (>1500 V).
Electrostatic Discharge (ESD) to the MT-RJ Receptacle	Variation of IEC 801-2	Typically withstand at least 15 kV without damage when the MT-RJ connector receptacle is contacted by a Human Body Model probe.
Electromagnetic Interference (EMI)	FCC Class B CENELEC EN55022 Class B (CISPR 22A) VCCI Class I	Margins are dependent on customer board and chassis designs.
Immunity	Variation of IEC 801-3	Typically show no measurable effect from a 10 V/m field swept from 27 to 1000 MHz applied to the transceiver without a chassis enclosure.
Laser Eye Safety and Equipment Type Testing TÜV Rheinland Product Safety / BAUART GEPRÜFT / TYPE APPROVED	US 21 CFR, Subchapter J per Paragraphs 1002.10 and 1002.12 EN 60825-1: 1994 +A11 EN 60825-2: 1994 EN 60950: 1992+A1+A2+A3	AEL Class I, FDA/CDRH HFBR-5912E Accession # 9720151-09 HFCT-5912E Accession # 9521220-20 AEL Class 1, TUV Rheinland of North America HFBR-5912E: Certificate # E9971083.01 HFCT-5912E: Certificate # 933/510817/05 Protection Class III
Component Recognition	Underwriters Laboratories and Canadian Standards Association Joint Component Recognition for Information Technology Equipment Including Electrical Business Equipment.	UL File # E173874

10 km Link Support
As well as complying with the LX 5 km standard, the HFCT-5912E specification provides additional margin allowing for a 10 km Gigabit Ethernet link on single mode fiber. This is accomplished by limiting the spectral width and center wavelength range of the transmitter while increasing the output optical power and improving sensitivity. All other LX cable plant recommendations should be followed.

Data Line Interconnections

Agilent's HFBR/HFCT-5912E fiber-optic transceiver is designed to couple to +3.3 V PECL signals. In order to reduce the number of passive components required on the customer's board, Agilent has included the functionality of the external transmitter bias resistors and coupling capacitors within the fiber optic module. The transceiver is compatible with a "dc-coupled" configuration and Figure 3 depicts the circuit options. Additionally, there is an internal, 50 Ohm termination resistance within the transmitter input section. The transmitter driver circuit regulates the output optical power. The regulated light output will maintain a constant output optical power provided the data pattern is reasonably balanced in duty factor. If the data duty factor has long, continuous state times (low or high data duty factor), then the output optical power will gradually change its average output optical power level to its preset value.

Per the multisource agreement, the HFBR/HFCT-5912E feature a transmit disable function which is a single-ended +3.3 V TTL input signal dc-coupled to pin 8.

As for the receiver section, it is internally ac-coupled between the preamplifier and the post-amplifier stages. The actual Data and Data-bar outputs of the post-amplifier are dc-coupled to their respective output pins (pins 4, 5). Signal Detect is a single-ended, +3.3 V TTL output signal that is dc-coupled to pin 3 of the module. Signal Detect should not be ac-coupled externally to the follow-on circuits because of its infrequent state changes.

Caution should be taken to account for the proper interconnection between the supporting Physical Layer integrated circuits and this HFBR/HFCT-5912E transceiver. Figure 3 illustrates a recommended interface circuit for interconnecting to a +3.3 V dc PECL fiber-optic transceiver.

Electrical and Mechanical Interface

Recommended Circuit
Figure 3 shows the recommended interface for deploying the Agilent transceiver in a +3.3 V system. Also present are power supply filtering arrangements which comply with the recommendations of the small form factor multisource agreement. This configuration ensures noise rejection compatibility between transceivers from various vendors.

Power Supply Filtering and Ground Planes
It is important to exercise care in circuit board layout to achieve optimum performance from these transceivers. Figure 3 shows the recommended power supply filter circuit for the SFF transceiver. It is further recommended that a contiguous ground plane be provided in the circuit board directly under the transceiver to provide a low inductance ground for signal return current. This recommendation is in keeping with good high frequency board layout practices.

The HFBR/HFCT-5912E is designed to cope with the electrically noisy environment inside the chassis box of Gigabit data communication systems. To minimize the impact of conducted and radiated noise upon receiver performance the metal cover at the rear of the HFBR/HFCT-5912E should be connected to the host system's circuit common ground plane. To maximize the shielding effectiveness and minimize the radiated emissions that escape from the host system's chassis box the metal shield that covers the MT-RJ receptacle should make electrical contact with the aperture required for the optical connector. The metal cover at the rear of the fiber-optic module is dielectrically isolated from the metal shield that covers the MT-RJ receptacle to avoid conflicts between circuit and chassis common.

Package footprint and front panel considerations
The Agilent transceiver complies with the circuit board "Common Transceiver Footprint" hole pattern defined in the original multisource announcement which defined the 2 x 5 package style. This drawing is reproduced in Figure 5 with the addition of ANSI Y14.5M compliant dimensioning to be used as a guide in the mechanical layout of your circuit board. Figure 6 shows the front panel dimensions associated with such a layout.

Eye Safety Circuit

For an optical transmitter device to be eye-safe in the event of a single fault failure, the transmitter must either maintain eye-safe operation or be disabled.

In the HFBR-5912E there are three key elements to the laser driver safety circuitry: a monitor diode, a window detector circuit, and direct control of the laser bias. The window detection circuit monitors the average optical power using the monitor diode. If a fault occurs such that the transmitter dc regulation circuit cannot maintain the preset bias conditions for the laser emitter within ± 20%, the transmitter will automatically be disabled. Once this has occurred, an electrical power reset or toggling the transmit disable will allow an attempted turn-on of the transmitter. If fault remains the transmitter will stay disabled.

The HFCT-5912E utilizes an optical subassembly consisting of a short piece of single mode fiber along with a current limiting circuit to guarantee eye-safety. It is intrinsically eye safe and does not require shut down circuitry.

Signal Detect

The Signal Detect circuit provides a TTL low output signal when the optical link is broken or when the transmitter is OFF as defined by the Gigabit Ethernet specification IEEE 802.3z, Table 38.1. The Signal Detect threshold is set to transition from a high to low state between the minimum receiver input optional power and -30 dBm avg. input optical power indicating a definite optical fault (e.g. unplugged connector for the receiver or transmitter, broken fiber, or failed far-end transmitter or data source). A Signal Detect indicating a working link is functional when receiving encoded 8B/10B characters. The Signal Detect does not detect receiver data error or error-rate. Data errors can be determined by signal processing offered by upstream PHY ICs.

Electromagnetic Interference (EMI)

One of a circuit board designer's foremost concerns is the control of electromagnetic emissions from electronic equipment. Success in controlling generated Electromagnetic Interference (EMI) enables the designer to pass a governmental agency's EMI regulatory standard and more importantly, it reduces the possibility of interference to neighboring equipment. Agilent has designed the HFBR/HFCT-5912E to provide excellent EMI performance. The EMI performance of a chassis is dependent on physical design and features which help improve EMI suppression. Agilent encourages using standard RF suppression practices and avoiding poorly EMI-sealed enclosures.

Radiated Emissions for the HFBR-5912E and HFCT-5912E have been tested successfully in several environments. While this number is important for system designers in terms of emissions levels inside a system, Agilent recognizes that the performance of most interest to our customers is the emissions levels, which could be expected to radiate to the outside world from inside a typical system. In their application, SFF transceivers are intended for use inside an enclosed system, protruding through the specified panel opening at the specified protrusion depth.

Along with the system advantage of high port density comes the increase in the number of apertures. Careful attention must be paid to the locations of high-speed clocks or gigabit circuitry with respect to these apertures. While experimental measurements and experiences do not indicate any specific transceiver emissions issues, Agilent recognizes that the transceiver aperture is often a weak link in system enclosure integrity and has designed the modules to minimize emissions and if necessary, contain the internal system emissions by shielding the aperture.

To that end, Agilent's gigabit MT-RJ transceivers (HFCT-5912E and HFBR-5912E) have nose shields which provide a convenient chassis connection to the nose of the transceiver. This nose shield improves system EMI performance by closing off the MT-RJ aperture. Localized shielding is also improved by tying the four metal housing package grounding tabs to signal ground on the PCB. Though not obvious by inspection, the nose shield and metal housing are electrically separated for customers who do not wish to directly tie chassis and signal grounds together. The recommended transceiver position, PCB layout and panel opening for both HFBR-5912E and HFCT-5912E are the same, making them mechanically drop-in compatible. Figure 6 shows the recommended positioning of the transceivers with respect to the PCB and faceplate.

Absolute Maximum Ratings

Stresses in excess of the absolute maximum ratings can cause catastrophic damage to the device. Limits apply to each parameter in isolation, all other parameters having values within the recommended operating conditions. It should not be assumed that limiting values of more than one parameter can be applied to the product at the same time. Exposure to the absolute maximum ratings for extended periods can adversely affect device reliability.

Parameter	Symbol	Min.	Typ.	Max.	Unit	Reference
Storage Temperature	T_S	-40		+85	°C	
Supply Voltage	V_{CC}	-0.5		5.0	V	1
Received Data Output Current	I_D			30	mA	
Relative Humidity	RH	5		95	%	
TTL Transmit Disable Input Current - Low	I_{ILMAX}	-3.0			mA	
TTL Transmit Disable Input Current - High	I_{IHMAX}			3.0	mA	
TTL Signal Detect Output Current - Low	I_{OLMAX}	-5.0			mA	
TTL Signal Detect Output Current - High	I_{OHMAX}			4.0	mA	

Recommended Operating Conditions

Parameter	Symbol	Min.	Typ.	Max.	Unit	Reference
Ambient Operating Temperature	T_A	0		+70	°C	
Case Temperature	T_C	0		+80	°C	2
Supply Voltage	V_{CC}	3.14		3.47	V	
Power Supply Rejection	PSR		100		mV_{P-P}	3
Transmitter Differential Input Voltage	V_D	0.4		1.6	V	
Received Data Output Load	R_{DL}		50		Ω	4
TTL Signal Detect Output Current	I_{OL}			1.0	mA	
TTL Signal Detect Output Current	I_{OH}	-400			µA	
Transmit Disable Input Voltage - Low	V_{IL}			0.8	V	
Transmit Disable Input Voltage - High	V_{IH}	V_{CC} -1.3		V_{CC}	V	
Transmit Disable Assert Time	T_{ASSERT}			10	µs	5
Transmit Disable Deassert Time	$T_{DEASSERT}$			1.0	ms	6
TTL Transmit Disable Input Current - Low	I_{IL}	-1.0			mA	
TTL Transmit Disable Input Current - High	I_{IH}			400	µA	

Process Compatibility

Parameter	Symbol	Min.	Typ.	Max.	Unit	Reference
Hand Lead Soldering Temperature/Time	T_{SOLD}/t_{SOLD}			+260/10	°C/sec.	
Wave Soldering and Aqueous Wash	T_{SOLD}/t_{SOLD}			+260/10	°C/sec.	7

Notes:

1. The transceiver is Class 1 eye safe up to V_{CC} = 5.0 V.
2. Case temperature measurement referenced to the metal housing.
3. Tested with a 100 mV_{P-P} sinusoidal signal in the frequency range from 10 Hz to 2 MHz on the V_{CC} supply with the recommended power supply filter (with C8) in place. Typically less than a 1 dB change in sensitivity is experienced.
4. To V_{CC} -2 V.
5. Time delay from Transmit Disable Assertion to laser shutdown.
6. Time delay from Transmit Disable Deassertion to laser startup.
7. Aqueous wash pressure <110 psi.

HFBR-5912E, 850 nm VCSEL

Transmitter Electrical Characteristics

(T_A = 0°C to +70°C, V_{CC} = 3.14 V to 3.47 V)

Parameter	Symbol	Min.	Typ.	Max.	Unit	Reference
Supply Current	I_{CCT}		55	75	mA	
Power Dissipation	P_{DIST}		0.18	0.26	W	

Receiver Electrical Characteristics

(T_A = 0°C to +70°C, V_{CC} = 3.14 V to 3.47 V)

Parameter	Symbol	Min.	Typ.	Max.	Unit	Reference
Supply Current	I_{CCR}		80	135	mA	1
Power Dissipation	P_{DISR}		0.23	0.36	W	2
Data Output Voltage - Low	V_{OL} - V_{CC}	-1.950		-1.620	V	3
Data Output Voltage - High	V_{OH} - V_{CC}	-1.045		-0.740	V	3
Data Output Rise Time	t_r			0.40	ns	4
Data Output Fall Time	t_f			0.40	ns	4
Signal Detect Output Voltage - Low	V_{OL}			0.6	V	5
Signal Detect Output Voltage - High	V_{OH}	2.2			V	5
Signal Detect Assert Time	T_{ASSERT}			100	µs	
Signal Detect Deassert Time	$T_{DEASSERT}$			350	µs	

Notes:
1. With recommended 130 Ω receiver data output load.
2. Power dissipation value is the power dissipated in the receiver itself. It is calculated as the sum of the products of V_{CC} and I_{CC} minus the sum of the products of the output voltages and currents.
3. These outputs are compatible with 10 k, 10 kH, and 100 k ECL and PECL inputs.
4. These are 20-80% values.
5. Under recommended operating conditions.

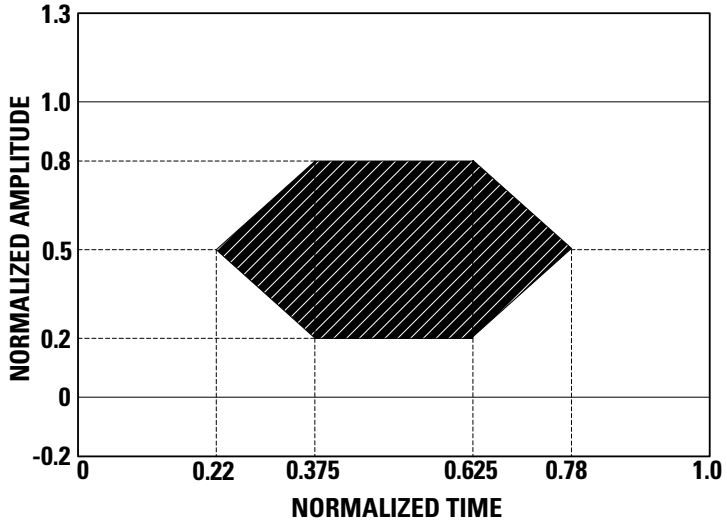

Figure 1. Transmitter Optical Eye Diagram Mask

HFBR-5912E Family, 850 nm VCSEL

Transmitter Optical Characteristics

(T_A = 0°C to +70°C, V_{CC} = 3.14 V to 3.47 V)

Parameter	Symbol	Min.	Typ.	Max.	Unit	Reference
Output Optical Power 50/125 µm, NA = 0.20 Fiber	P_{OUT}	-9.5		-4	dBm avg.	1
Output Optical Power 62.5/125 µm, NA = 0.275 Fiber	P_{OUT}	-9.5		-4	dBm avg.	1
Disabled Transmit Output Power	$P_{OUT\ DISABLED}$			-30.0	dBm avg.	
Optical Extinction Ratio		9			dB	2
Center Wavelength	λ_C	830	850	860	nm	
Spectral Width - rms	σ			0.85	nm rms	
Optical Rise/Fall Time	t_r/t_f			0.26	ns	3,4, Figure 1
RIN_{12}				-117	dB/Hz	
Coupled Power Ratio	CPR	9			dB	5
Total Transmitter Jitter Added at TP2				227	ps	6

Receiver Optical Characteristics

(T_A = 0°C to +70°C, V_{CC} = 3.14 V to 3.47 V)

Parameter	Symbol	Min.	Typ.	Max.	Unit	Reference
Input Optical Power	P_{IN}	-17		0	dBm avg.	7
Stressed Receiver Sensitivity	62.5 µm 50 µm			-12.5 -13.5	dBm avg. dBm avg.	8 8
Stressed Receiver Eye Opening at TP4		201			ps	6,9
Receive Electrical 3 dB Upper Cutoff Frequency				1500	MHz	10
Operating Center Wavelength	λ_C	770		860	nm	
Return Loss		12			dB	11
Signal Detect – Asserted	P_A			-17	dBm avg.	12
Signal Detect – Deasserted	P_D	-30			dBm avg.	12
Signal Detect – Hysteresis	P_A - P_D	1.5			dB	12

Notes:

1. The maximum Optical Output Power complies with the IEEE 802.3z specification, and is Class 1 laser eye safe.
2. Optical Extinction Ratio is defined as the ratio of the average output optical power of the transmitter in the high (“1”) state to the low (“0”) state. The transmitter is driven with a Gigabit Ethernet 1250 MBd 8B/10B encoded serial data pattern. This Optical Extinction Ratio is expressed in decibels (dB) by the relationship 10log(Phigh avg/Plow avg).
3. These are unfiltered 20-80% values.
4. Laser transmitter pulse response characteristics are specified by an eye diagram (Figure 1). The characteristics include rise time, fall time, pulse overshoot, pulse undershoot, and ringing, all of which are controlled to prevent excessive degradation of the receiver sensitivity. These parameters are specified by the referenced Gigabit Ethernet eye diagram using the required filter. The output optical waveform complies with the requirements of the eye mask discussed in section 38.6.5 and Fig. 38-2 of IEEE 802.3z.
5. CPR is measured in accordance with EIA/TIA-526-14A as referenced in 802.3z, section 38.6.10.
6. TP refers to the compliance point specified in 802.3z, section 38.2.1.
7. The receive sensitivity is measured using a worst case extinction ratio penalty while sampling at the center of the eye.
8. The stressed receiver sensitivity is measured using the conformance test signal defined in 802.3z, section 38.6.11. The conformance test signal is conditioned by applying deterministic jitter and intersymbol interference.
9. The stressed receiver jitter is measured using the conformance test signal defined in 802.3z, section 38.6.11 and set to an average optical power 0.5 dB greater than the specified stressed receiver sensitivity.
10. The 3 dB electrical bandwidth of the receiver is measured using the technique outlined in 802.3z, section 38.6.12.
11. Return loss is defined as the minimum attenuation (dB) of received optical power for energy reflected back into the optical fiber.
12. With valid 8B/10B encoded data.

HFCT-5912E, 1300 nm FP Laser

Transmitter Electrical Characteristics

(T_A = 0°C to +70°C, V_{CC} = 3.14 V to 3.47 V)

Parameter	Symbol	Min.	Typ.	Max.	Unit	Reference
Supply Current	I_{CCT}		70	120	mA	
Power Dissipation	P_{DIST}		0.23	0.42	W	

Receiver Electrical Characteristics

(T_A = 0°C to +70°C, V_{CC} = 3.14 V to 3.47 V)

Parameter	Symbol	Min.	Typ.	Max.	Unit	Reference
Supply Current	I_{CCR}		85	100	mA	
Power Dissipation	P_{DISR}		0.28	0.33	W	1
Data Output Voltage - Low	V_{OL} - V_{CC}	-1.810		-1.620	V	2
Data Output Voltage - High	V_{OH} - V_{CC}	-1.045		-0.880	V	2
Data Output Rise Time	t_r			0.40	ns	3
Data Output Fall Time	t_f			0.40	ns	3
Signal Detect Output Voltage - Low	V_{OL}			0.6	V	
Signal Detect Output Voltage - High	V_{OH}	2.2			V	
Signal Detect Assert Time	T_{ASSERT}			100	µs	
Signal Detect Deassert Time	$T_{DEASSERT}$			100	µs	

Notes:

1. Power dissipation value is the power dissipated in the receiver itself. It is calculated as the sum of the products of V_{CC} and I_{CC} minus the sum of the products of the output voltages and currents.
2. These outputs are compatible with 10 k, 10 kH, and 100 k ECL and PECL inputs.
3. These are 20-80% values.

HFCT-5912E, 1300 nm FP Laser

Transmitter Optical Characteristics

(T_A = 0°C to +70°C, V_{CC} = 3.14 V to 3.47 V)

Parameter	Symbol	Min.	Typ.	Max.	Unit	Reference
Output Optical Power 9 µm SMF 62.5 µm MMF 50 µm MMF	P_{OUT}	-9.5 -11.5 -11.5		-3 -3 -3	dBm dBm dBm	1 1 1
Disabled Transmit Output Power	$P_{OUT\ DISABLED}$			-30.0	dBm avg.	
Optical Extinction Ratio		9			dB	2
Center Wavelength	λ_C	1285		1343	nm	
Spectral Width - rms	σ			2.8	nm rms	
Optical Rise/Fall Time	t_r/t_f			0.26	ns	3,4, Figure 1
RIN_{12}				-120	dB/Hz	
Total Transmitter Jitter Added at TP2				227	ps	5

Receiver Optical Characteristics

(T_A = 0°C to +70°C, V_{CC} = 3.14 V to 3.47 V)

Parameter	Symbol	Min.	Typ.	Max.	Unit	Reference
Input Optical Power	P_{IN}	-20		-3	dBm avg.	6
Stressed Receiver Sensitivity				-14.4	dBm avg.	7
Stressed Receiver Eye Opening at TP4		201			ps	5, 8
Receive Electrical 3 dB Upper Cutoff Frequency				1500	MHz	9
Operating Center Wavelength	λ_C	1270		1355	nm	
Return Loss		12			dB	10
Signal Detect – Asserted	P_A			-20	dBm avg.	11
Signal Detect – Deasserted	P_D	-30			dBm avg.	11
Signal Detect – Hysteresis	$P_A - P_D$	0.5			dB	11

Notes:

1. The maximum Optical Output Power complies with the IEEE 802.3z specification, and is class 1 laser eye safe.
2. Optical Extinction Ratio is defined as the ratio of the average output optical power of the transmitter in the high (“1”) state to the low (“0”) state. The transmitter is driven with a Gigabit Ethernet 1250 MBd 8B/10B encoded serial data pattern. This Optical Extinction Ratio is expressed in decibels (dB) by the relationship 10log(Phigh avg /Plow avg).
3. These are unfiltered 20-80% values.
4. Laser transmitter pulse response characteristics are specified by an eye diagram (Figure 1). The characteristics include rise time, fall time, pulse overshoot, pulse undershoot, and ringing, all of which are controlled to prevent excessive degradation of the receiver sensitivity. These parameters are specified by the referenced Gigabit Ethernet eye diagram using the required filter. The output optical waveform complies with the requirements of the eye mask discussed in section 38.6.5 and Fig. 38-2 of IEEE 802.3z.
5. TP refers to the compliance point specified in 802.3z, section 38.2.1.
6. The receive sensitivity is measured using a worst case extinction ratio penalty while sampling at the center of the eye.
7. The stressed receiver sensitivity is measured using the conformance test signal defined in 802.3z, section 38.6.11. The conformance test signal is conditioned by applying deterministic jitter and intersymbol interference.
8. The stressed receiver jitter is measured using the conformance test signal defined in 802.3z, section 38.6.11 and set to an average optical power 0.5 dB greater than the specified stressed receive sensitivity.
9. The 3 dB electrical bandwidth of the receiver is measured using the technique outlined in 802.3z, section 38.6.12.
10. Return loss is defined as the minimum attenuation (dB) of received optical power for energy reflected back into the optical fiber.
11. With valid 8B/10B encoded data.

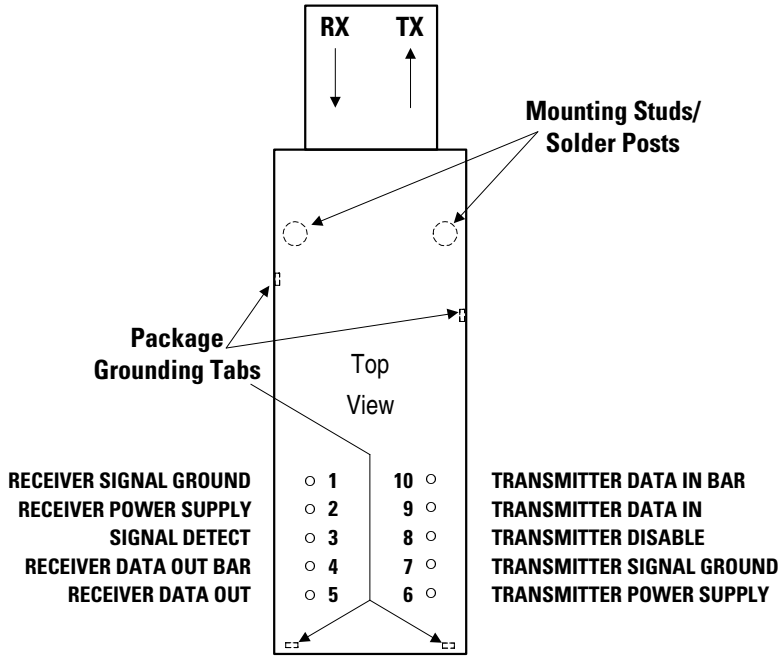

Figure 2. Pin Out

Table 1. Pin Out Table

Pin	Symbol	Functional Description
Two Mounting Studs		The mounting studs are provided for transceiver mechanical attachment to the circuit board, they may also provide an optional connection of the transceiver to the equipment chassis ground. **Note :-** The holes in the circuit board must be tied to chassis ground.
Four Package Grounding Tabs		Connect to signal ground.
1	V_{EER} [1]	Receiver Signal Ground Directly connect this pin to receiver signal ground plane.
2	V_{CCR}	Receiver Power Supply
3	SD	Signal Detect Normal operation: Logic “1” Output Fault Condition: Logic “0” Output
4	RD-	Received Data Out Bar No internal terminations provided.
5	RD+	Received Data Out No internal terminations provided.
6	V_{CCT}	Transmitter Power Supply
7	V_{EET} [1]	Transmitter Signal Ground
8	TDis	Transmitter Disable: Normal Operation: Logic "0" - Laser On or Open Circuit Transmit Disabled: Logic "1" - Laser Off
9	TD+	Transmitter Data In An internal 50R termination consisting of 100R across TD+ and TD- will be provided
10	TD-	Transmitter Data In Bar (See TD+ pin for terminaton details)

Note:
1. The Transmitter and Receiver V_{EE} connections are commoned within the module.

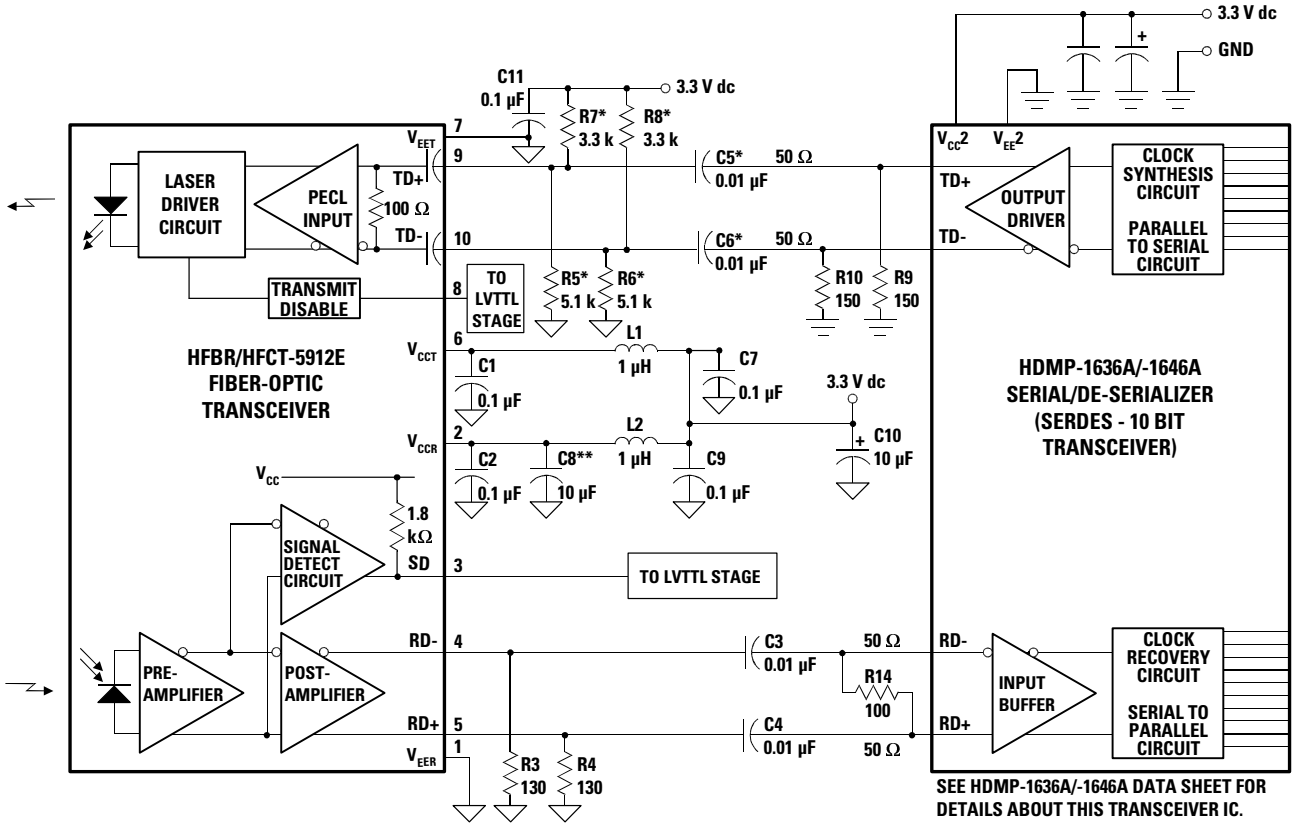

NOTES:
USE SURFACE-MOUNT COMPONENTS FOR OPTIMUM HIGH-FREQUENCY PERFORMANCE.
USE 50 Ω MICROSTRIP OR STRIPLINE FOR SIGNAL PATHS.
LOCATE 50 Ω TERMINATIONS AT THE INPUTS OF RECEIVING UNITS.
* IN ORDER TO ELIMINATE REQUIRED EXTERNAL PASSIVE COMPONENTS, AGILENT HAS INCLUDED THE EQUIVALENT OF RESISTORS R5 - R8 AND CAPACITORS C5 AND C6 WITHIN THE MODULE. R5 - R8, C5 AND C6 ARE INCLUDED AS PART OF THE APPLICATION CIRCUIT TO ACCOMMODATE OTHER TRANSCEIVER VENDORS' MODULES. THE HFBR/HFCT-5912E WILL OPERATE IN BOTH CONFIGURATIONS.
**C8 IS A RECOMMENDED BYPASS CAPACITOR FOR ADDITIONAL LOW FREQUENCY NOISE FILTERING.
THE SIGNAL DETECT OUTPUT ON THE HFBR-5912E CONTAINS AN INTERNAL 1.8 kΩ PULL UP RESISTOR. THE OUTPUT STAGE ON THE HFCT-5912E IS A PUSH PULL CONFIGURATION AND THEREFORE DOES NOT REQUIRE AN EXTERNAL PULL UP RESISTOR.

Figure 3. Recommended Gigabit/sec Ethernet HFBR/HFCT-5912E Fiber-Optic Transceiver and HDMP-1636A/1646A SERDES Integrated Circuit Transceiver Interface and Power Supply Filter Circuits.

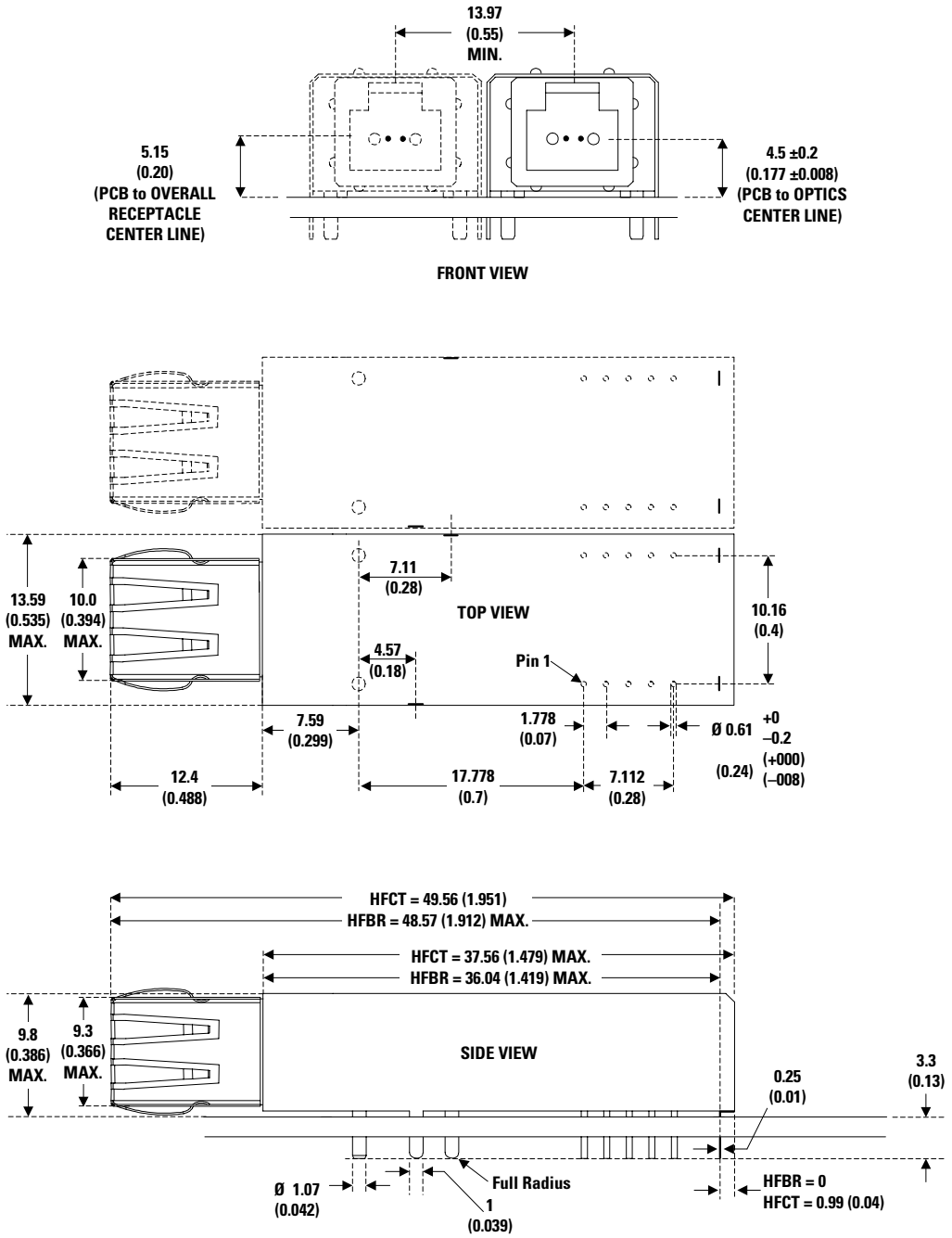

DIMENSIONS IN MILLIMETERS (INCHES)

NOTES:
1. THIS PAGE DESCRIBES THE MAXIMUM PACKAGE OUTLINE, MOUNTING STUDS, PINS AND THEIR RELATIONSHIPS TO EACH OTHER.
2. TOLERANCED TO ACCOMMODATE ROUND OR RECTANGULAR LEADS.
3. THE 10 I/O PINS, 2 SOLDER POSTS AND 4 PACKAGE GROUNDING TABS ARE TO BE TREATED AS A SINGLE PATTERN. (SEE FIGURE 5 PCB LAYOUT).
4. THE MT-RJ HAS A 750 µm FIBER SPACING.
5. THE MT-RJ ALIGNMENT PINS ARE IN THE MODULE.
6. SEE MT-RJ TRANSCEIVER PIN OUT DIAGRAM FOR DETAILS.

Figure 4. Package Outline Drawing of HFBR/HFCT-5912E

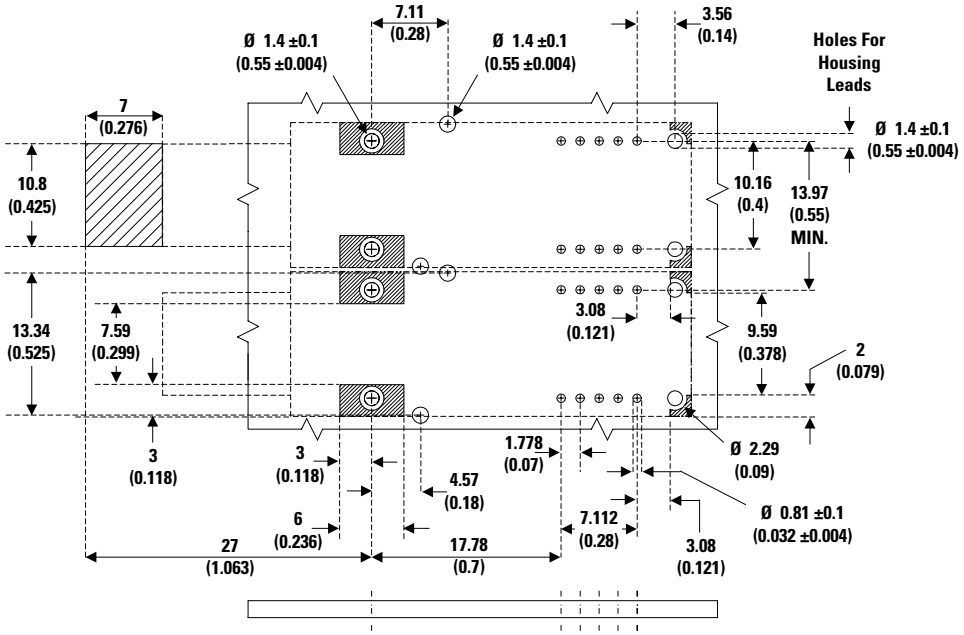

DIMENSIONS IN MILLIMETERS (INCHES)

NOTES:

1. THIS FIGURE DESCRIBES THE RECOMMENDED CIRCUIT BOARD LAYOUT FOR THE MT-RJ TRANSCEIVER PLACED AT .550 SPACING.
2. THE HATCHED AREAS ARE KEEP-OUT AREAS RESERVED FOR HOUSING STANDOFFS. NO METAL TRACES OR GROUND CONNECTION IN KEEP-OUT AREAS.
3. 2 x 5 TRANSCEIVER MODULE REQUIRES 16 PCB HOLES (10 I/O PINS, 2 SOLDER POSTS AND 4 PACKAGE GROUNDING TABS).
   PACKAGE GROUNDING TABS SHOULD BE CONNECTED TO SIGNAL GROUND.
4. SOLDER POSTS SHOULD BE SOLDERED TO PCB FOR MECHANICAL INTEGRITY AND THE HOLES IN THE CIRCUIT BOARD CONNECTED TO CHASSIS GROUND.

Figure 5. Recommended Board Layout Hole Pattern

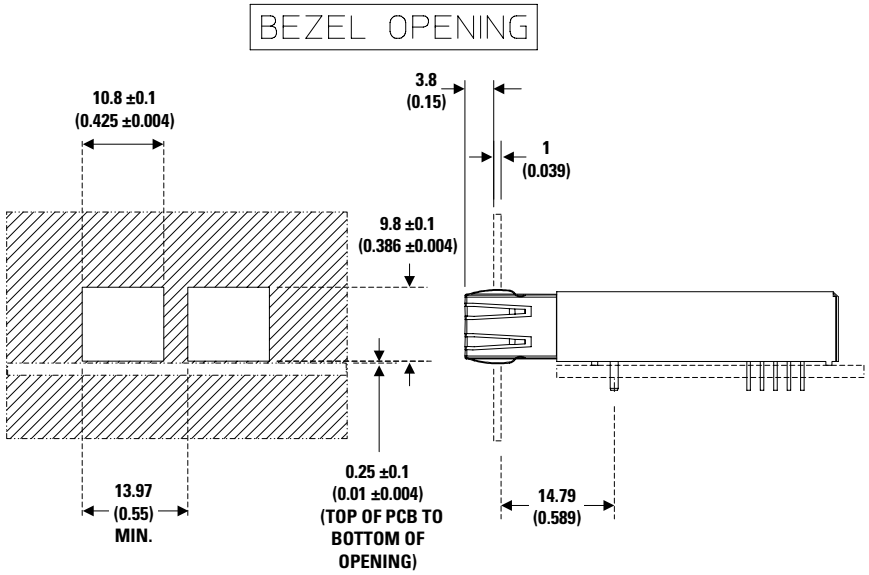

DIMENSIONS IN MILLIMETERS (INCHES)

NOTE: NOSE SHIELD SHOULD BE CONNECTED TO CHASSIS GROUND.

Figure 6. Recommended Panel Mounting

Agilent Technologies
Innovating the HP Way

Ordering Information

HFBR-5912E - 850 nm VCSEL (Short Wavelength Laser) 1000 Base SX Application

HFCT-5912E - 1300 nm FP Laser (Long Wavelength Laser) 1000 Base LX Application

www.semiconductor.agilent.com

Data subject to change.
Copyright © 2000 Agilent Technologies Inc.
5968-9719E (02/00)