Angle Modulation Receivers

Tomasi, Chapter 7

FM Receivers

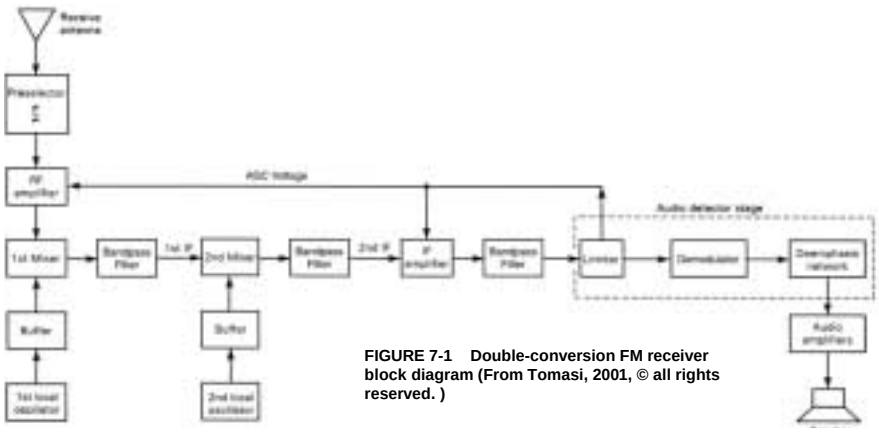

FIGURE 7-1 Double-conversion FM receiver block diagram (From Tomasi, 2001, © all rights reserved.)

- **FM: $V_{out}(t) \sim f(t)$**
- **PM: $v_{out}(t) \sim \phi(t)$**
- **Typical block diagram**
  - **Mixer & IF strip(s) like AM**
  - **Detector differs**

FM Demodulators

- **Want…**

$$v_{out}(t) = K_d \Delta f(t)$$

- ***Single ended slope detector***
  - **Place f_c (unmodulated frequency) on most linear portion of transfer characteristic (v_{out} vs. f_{in})**
  - **Peak detector incorporated**
  - **Nonlinear slope**
  - **Susceptible to amplitude variations (add limiter circuit)**

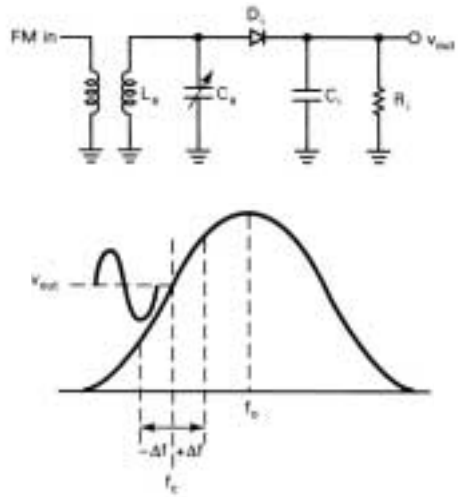

FIGURE 7-2 Slope detector: (a) schematic diagram; (b) voltage-versus-frequency curve (From Tomasi, 2001, © all rights reserved.)

FM Demodulators (cont)

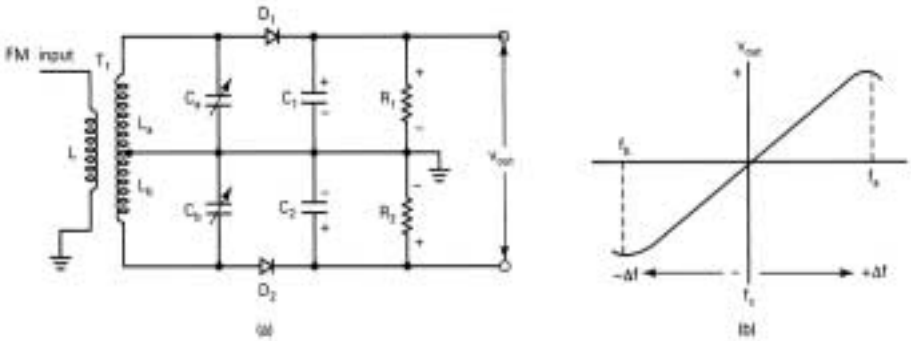

FIGURE 7-3 Balanced slope detector: (a) schematic diagram; (b) voltage-versus-frequency response curve (From Tomasi, 2001, © all rights reserved.)

- ***Balanced slope detector***
  - **2 single-ended slope detectors (one a 1.33 f_c and one at 0.67f_c)**
  - **Better linearity (but still poor)**
  - **Needs separate limiter**

FM Demodulators (cont)

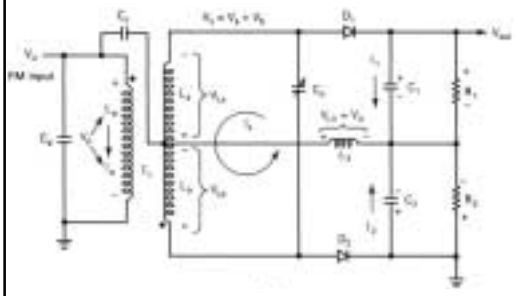

FIGURE 7-4 Foster-Seeley discriminator: (a) schematic diagram; (From Tomasi, 2001, © all rights reserved.)

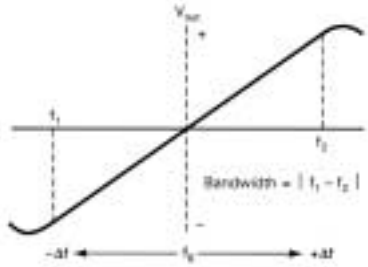

FIGURE 7-5 Discriminator voltage-versus-frequency response curve (From Tomasi, 2001, © all rights reserved.)

- *Foster-Seeley discriminator*
  - Similar to balanced-slope demodulator
  - Pros: more linear than slope detector, easier to tune center frequency
  - Cons: needs separate limiter

5

FM Demodulators (cont)

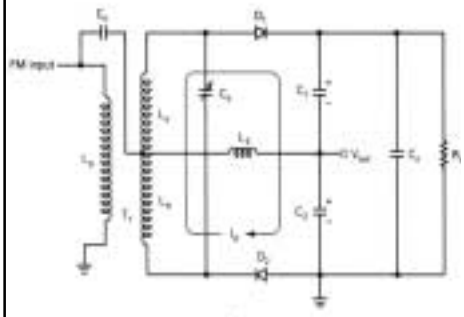

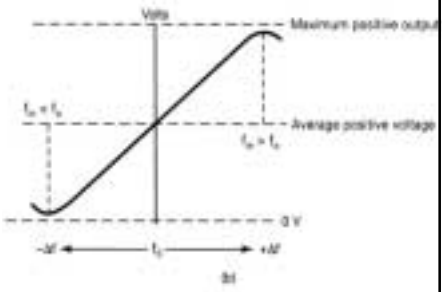

FIGURE 7-6 Ratio detector: (a) schematic diagram; (b) voltage-versus-frequency response curve (From Tomasi, 2001, © all rights reserved.)

- *Ratio detector*
  - Immune to amplitude variations
  - Single tuned circuit
  - Provides positive-shifted transfer characteristic
  - Pros: Relatively immune to amplitude variations
  - Cons: less linear than discriminator

6

FM Demodulators (cont)

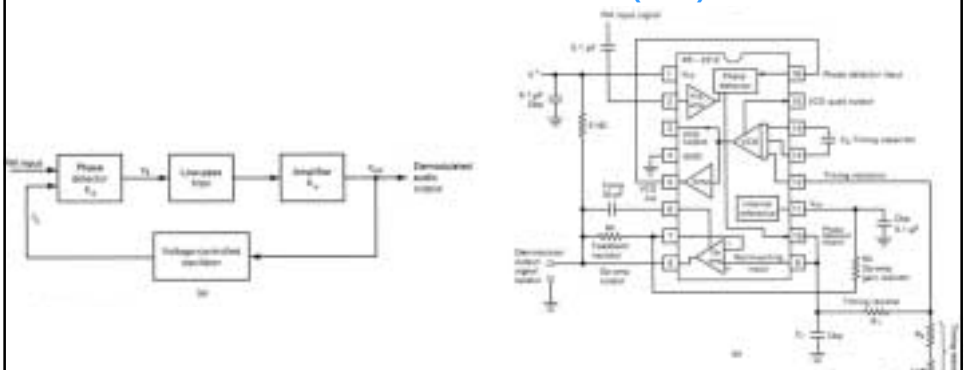

FIGURE 7-7 (a) Block diagram for a PLL FM demodulator; (b) PLL FM demodulator using the XR-2212 PLL (From Tomasi, 2001, © all rights reserved.)

- *Phase-Locked Loop (PLL)*
  - Voltage controlled oscillator locked to phase (and frequency) of incoming signal $V_{out}(t) = K_d K_a \Delta f(t)$
  - Available in integrated circuit form
  - No tuning
  - Ignores amplitude fluctuations (ideally), but better w limiter

7

FM Demodulators (cont)

- *Quadrature FM demodulator*
  - RLC "tank circuit" shifts carrier by 90°

$$v_{out} = v_i v_0 = [V_i \sin(2\pi f_i t + \theta)][V_o \sin(2\pi f_o t)]$$

$$= \left(\frac{V_i V_0}{2}\right)[\sin(2\pi(2f_i)t + \theta) + \sin(\theta)]$$

$$= \left(\frac{V_i V_0}{2}\right)[\sin(\theta)] \approx \left(\frac{V_i V_0}{2}\right)\theta \approx \left(\frac{V_i V_0}{2}\right)\left(\frac{2\pi f Q}{f_o}\right) \quad \text{(after LPF)}$$

$$\theta = \tan^{-1}\left(\frac{2\pi f Q}{f_o}\right) \approx \frac{2\pi f Q}{f_o}$$

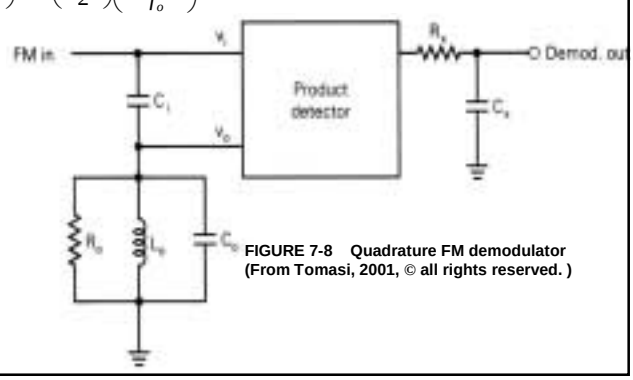

FIGURE 7-8 Quadrature FM demodulator (From Tomasi, 2001, © all rights reserved.)

Amplitude Limiters

- Minimize errors due to amplitude fluctuations
- *Limiter*: outputs constant for all inputs above threshold value
- *FM threshold effect*: Low noise if signal above threshold

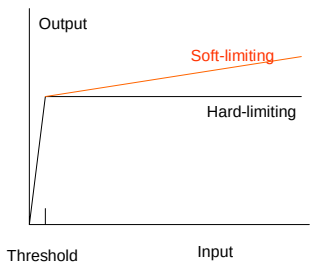

- *FM capture effect:* Strongest signal dominates

Amplitude Limiters (cont)

- *FM quieting*: Predetection SNR > 10 dB
  - IF signal amplified to overdrive limiter
  - m ≥ 1
- SNR Curves (Fig. 7-11)
  - *m* = 1 and *m* = 4; SNR output ~ m^2 (6 dB improvement)
  - Quieting ratio:
    - *m* = 1, SNR_{in} ~ 13 dB
    - *m* = 4, SNR_{in} ~ 22 dB
  - *m* =1, 13-dB SNR_{in} gives 30-dB SNR_{out}, 17 dB improvement (some improvement noted after 10-dB SNR_{in})

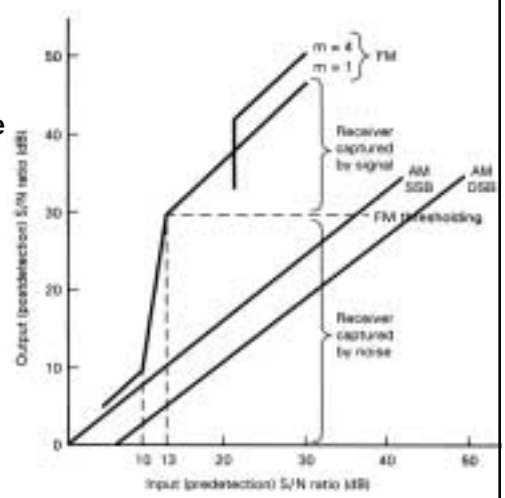

FIGURE 7-11 FM thresholding (From Tomasi, 2001, © all rights reserved.)

Amplitude Limiters (cont)

- **Limiting circuits**

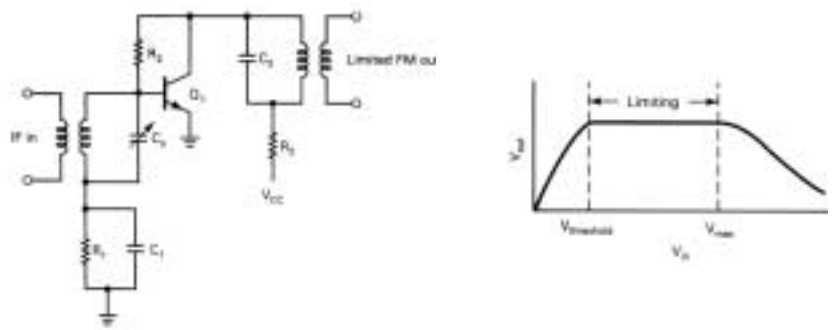

FIGURE 7-12 Single-stage tuned limiter: (a) schematic diagram; (b) limiter action (From Tomasi, 2001, © all rights reserved.)

Example Problem 7-2, p. 289

- **FM receiver, B = 200 kHz, power noise figure of 8 dB, input noise temp = 100 K, SNR_{post} = 37 dB, S_{min} =?**
- **Receiver quieting for *m* = 1 is 17 dB for SNR_{in} > 13 dB; so SNR_{in} is 37 – 17 = 20 dB**
- **Recall NF[dB] = SNR_{in}[dB] – SNR_{out}[dB] (Eq. 1.37, p. 42, rewritten)**
- **NF of Rcvr is 8 dB so SNR_{in} = 20 + 8 = 28 dB**
- **SNR = 28 dB = S[dBm] – N[dBm]**
- **N[dBm] = 10 log(KTB/(1x10^{-3})) = –125.6 dBm**
- **S[dBm] = 28 + N[dBm] = 28 + (–125.6) = –97.6 dBm**
- **S = $10^{(-97.6/10)}$ mW = 1.738x10^{-10} mW = 17.38 pW**

Frequency vs. Phase Modulation

- PM:
  - Requires coherent demodulation (phase-lock loops now provides)
  - Modulation index is independent of modulating-signal frequency
    - Better SNR
    - No pre-emphasis circuit
- FM: can use noncoherent detectors (but use tuned circuits and transformers)

13

Linear IC FM Receivers

- IF amp strip available in IC package
  - IF amplifiers
  - Signal strength measurement (AGC, strength meter)
  - Limiter
  - Quadrature detection (homodyne mixing of I and Q signals)

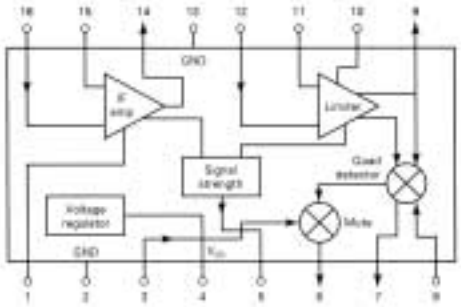

FIGURE 7-16 Block diagram for the Signetics NE/SA614A integrated-circuit, low-power FM IF system (From Tomasi, 2001, © all rights reserved.)

14

Linear IC Mixers and IF

- Same as IF strip but with oscillator and mixer circuit added

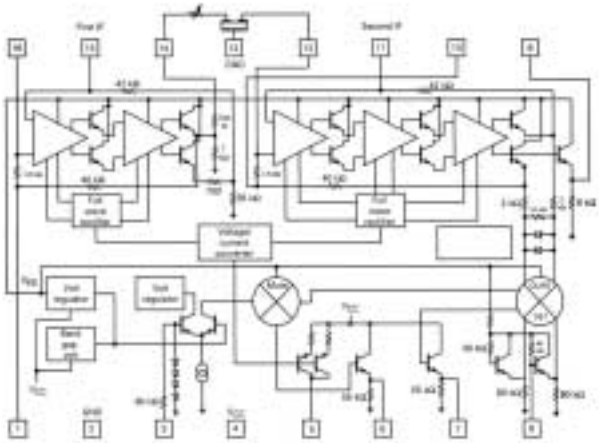

FIGURE 7-17 Equivalent circuit for the Signetics NE/SA614A integrated-circuit, low-power FM IF system (From Tomasi, 2001, © all rights reserved.)

15

Linear IC Radio Receivers

- IC FM receiver radio system
  - All active components integrated onto single device

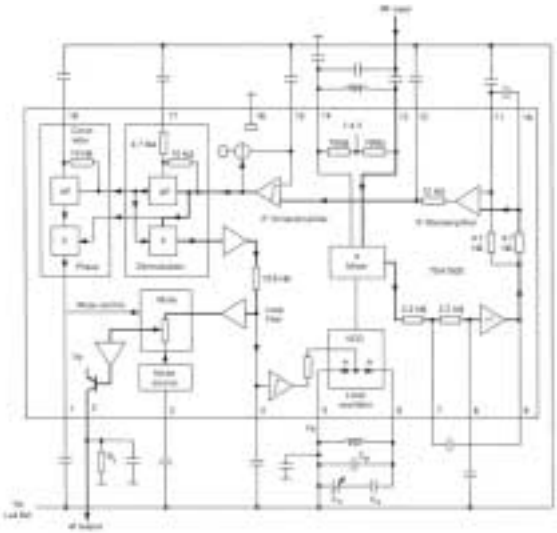

FIGURE 7-20 Block diagram for the Signetics TDA7000 integrated-circuit FM radio (From Tomasi, 2001, © all rights reserved.)

16

FM Stereo

- **Broadcast two channels**
- **Backward compatible with mono receivers**
- **Two channels (50 Hz – 15 kHz; L and R; ≥ 40 dB isolation between channels)**

FM Stereo (cont)

- **Spectrum**
  - **SCA (Subsidiary Communications Authorization) channel: 7 kHz wide; DSB or low-*m* FM from 60–74 kHz**
  - **FM stereo**
    - **19-kHz stereo pilot signal added**
    - **L+R in traditional channel (compatibility)**
    - **L-R carried as DSB SC AM around 38 kHz (2x 19 kHz) carrier**
- **Frequency deviation: still 75 kHz max; 7.5 kHz (10%) for SCA; 7.5 kHz (10%) for 19-kHz stereo pilot; 60 kHz (80%) for stereo signals (time interleaving allows each a full 60-kHz deviation)**

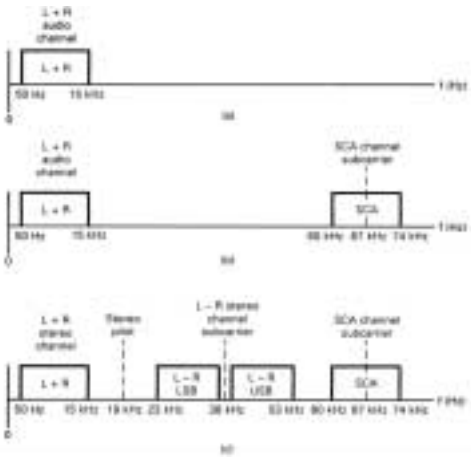

FIGURE 7-21 FM baseband spectrum: (a) prior to 1955; (b) prior to 1961; (c) since 1961 (From Tomasi, 2001, © all rights reserved.)

FM Stereo (cont)

- FM stereo transmitter
  - "Matrix network" produces L+R and L–R signals
  - L–R is DSB SC AM'ed by 38 kHz (L+R is delayed by time delay of L–R)
  - 19 kHz, L+R, L–R, SCA are linearly added together
  - Sent to transmitter for frequency upconversion and transmission

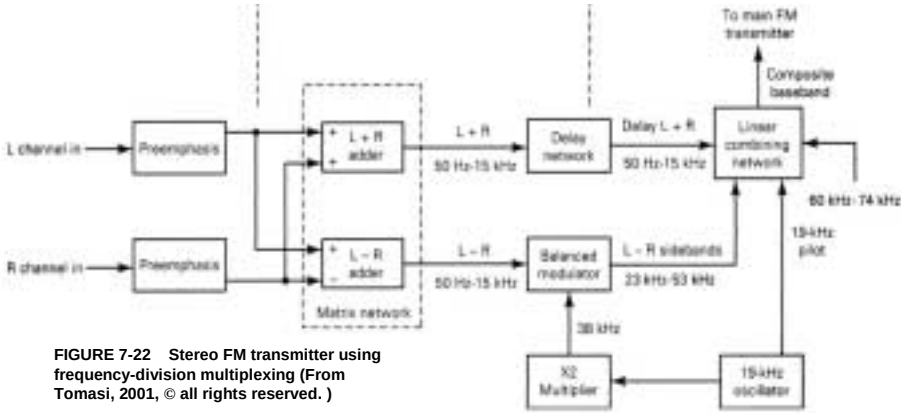

FIGURE 7-22 Stereo FM transmitter using frequency-division multiplexing (From Tomasi, 2001, © all rights reserved.)

19

FM Stereo (cont)

- FM stereo receiver
  - Received and frequency downconverted
  - SCA, L+R, L–R, 19-kHz pilot signal filtered (in frequency) and recovered (SCA and L+R FM detected; L–R AM detected with 2x19 kHz pilot)
  - L+R and L–R combined into L and R by "matrix network"
  - L, R amplified and put into output device (e.g., speakers)

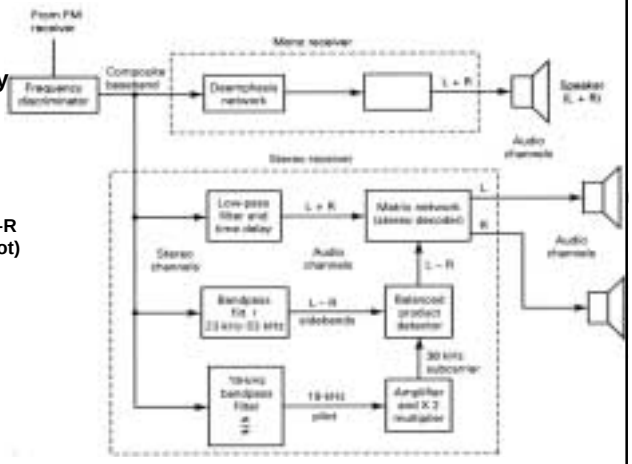

FIGURE 7-25 FM stereo and mono receiver (From Tomasi, 2001, © all rights reserved.)

20

FM Stereo (cont)

- Linear IC FM stereo demodulator
  - No tuning circuits; only R's and C's used in external circuits

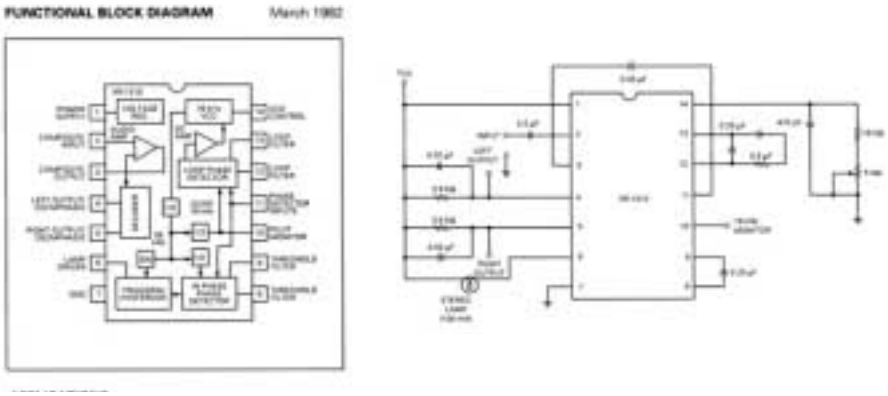

FIGURE 7-27 XR-1310 stereo demodulator
(From Tomasi, 2001, © all rights reserved.)

Two-Way FM Radio

- E.g., Public safety communications
  - 132–174 MHz, 450 –470 MHz, and 806–947 MHz
  - Max freq deviation: 5 kHz
  - Max modulating freq: 3 kHz (low quality voice)
  - m = 1.67; B ~ 24 kHz
  - Half-duplex (push-to-talk)
  - Two-channel full-duplex

Two-Way FM Radio (cont)

- Two-way FM radio transmitter
  - Indirect FM receiver shown
  - Crystal controlled oscillators (set by channel switch)
  - Has needed freq stability (±0.0002% = 2 ppm)
  - PM modulator (varactor-controlled tuned circuit)
  - Electronic push-to-talk (VOX - voice-operated circuit)
  - Frequency multiplication (typical of indirect FM)

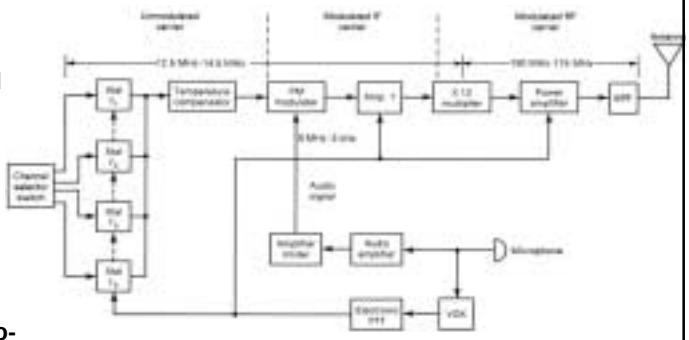

FIGURE 7-28 Two-way FM transmitter block diagram (From Tomasi, 2001, © all rights reserved.)

23

Two-Way FM Radio (cont)

- Two-way FM radio receiver
  - Crystal oscillator chosen by channel switch; multiplied by 9x (not shown on figure!)
  - Signal downconverted to IF (20 MHz)
    - Low-side injected ($f_{LO} = [f_{RF}-f_{IF}]/9$)
  - IF amplified & filtered
  - Detected by fre-quency discriminator
  - Amplified and output

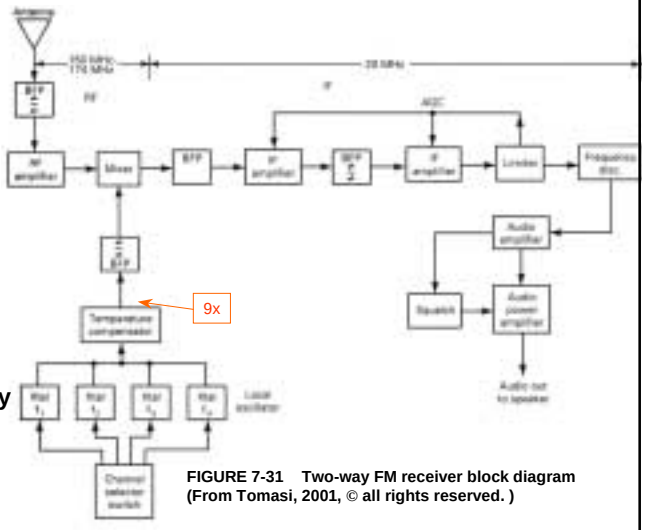

FIGURE 7-31 Two-way FM receiver block diagram (From Tomasi, 2001, © all rights reserved.)

24

Summary

- Have covered…
  - FM reception: frequency discriminators, phase-locked loop detector, quadrature demodulation
  - Amplitude limiters: quieting, SNR advantages
  - Linear IC receivers and subsystems
  - FM Stereo FM broadcasting
  - 2-way FM radio (voice)

25