# PARTICLE SIZING IN ROCKET MOTOR STUDIES UTILIZING HOLOGRAM IMAGE PROCESSING*

David Netzer and John Powers
Naval Postgraduate School
Monterey, California 93943

## ABSTRACT

This paper describes a technique of obtaining particle size information from holograms of combustion products. The holograms are obtained with a pulsed ruby laser through windows in a combustion chamber. The reconstruction is done with a krypton laser with the real image being viewed through a microscope. The particle size information is measured with a Quantimet 720 image processing system which can discriminate various features and perform measurements of the portions of interest in the image. Various problems that arise in the technique are discussed, especially those that are a consequence of the speckle due to the diffuse illumination used in the recording process.

## INTRODUCTION

A continuing investigation[1] is being conducted at the Naval Postgraduate School (NPS) to obtain quantitative data that can be used to relate solid rocket propellant composition and operating environment to the behavior of solid particulates (Al, $Al_2O_3$) within the grain port and exhaust nozzle. These data are needed to improve predictive capabilities of propellant performance, to provide input related to ammonium perchlorate (AP)-aluminum interactions for steady-state combustion models, and to provide in-motor particle size distributions to allow more accurate predictions of damping in stability analyses. The expected range of particle sizes is from 1 μm to 200 μm. While work has been done on a variety of techniques, including high speed motion pictures, analysis of post-fire residue with a scanning electron microscope, and particle sizing by scattered light measurements, this paper will focus on the application of particle sizing using holograms of burning propellant strands and slabs in a cross-flow environment.

## HOLOGRAM RECORDING

A diagram of the two-dimensional motor is shown in figure 1. A glass window (18.5 mm diameter) in the motor walls allows recording of the hologram. The window position allows centering

*This research was sponsored by the Air Force Rocket Propulsion Laboratory, Edwards Air Force Base.

of the edge of the largest combustion slab. The smallest combustion slabs are out of view with these window positions. Self-pressurization of the burning slabs was inadequate to achieve desired values (34 atm. and greater), so a nitrogen pressurization technique was incorporated into the top of the motor chamber. A 0-80 screw was mounted outside of the rear window (from the laser) to provide a size and position reference in the reconstructed hologram. Additionally, holograms were recorded of resolution charts and glass beads (both opaque and transparent) of known size for calibration purposes and investigations in changing recording or reconstruction geometries.

The laser system is a pulsed ruby laser[2] consisting of a Q-switched oscillator, a ruby amplifier, beam expanding optics, an alignment autocollimator, a HeNe pointing laser, the capacitor bank, and associated electronic power supplies. The operating wavelength is 694.3 nm with a beam diameter of approximately 3.2 cm. A one joule pulse with a 50 ns pulselength was used for this investigation.

All holograms were recorded with diffuse illumination from the laser in order to minimize the presence of Schlieren interference fringes produced by temperature and density variations of the combustion gas products during the burn. The diffuse illumination was made by introducing a glass diffuser into the scene illumination beam. This diffuse illumination introduces speckle into the reconstructed images as will be discussed in detail later. The primary problem in sizing the particles in the reconstructed image is interference from this speckle which can have a maximum size that is comparable to the particles at the lower end of the expected particle size distribution.

The holocamera[3] (shown in the reconstruction diagram of figure 2) incorporates assisting lenses to increase the effective field of view of the camera with a subsequent increase in resolution. Holographic plates from AGFA-Gevaert (Model 8E75 HD plates) were used for hologram recording.

Holographic recordings have been made successfully using propellant strands burned at operating pressures of 34 and 68 atm. and with various concentrations of alumininum (up to 15% aluminum). Single pulse holography provides a means of effectively stopping motion. It only provides information during the single instant of time, however. Smoke generation (i.e., small $Al_2O_3$ and binder products, etc.) presents a major obstacle to obtaining good holograms. The smoke reduces illumination levels in portions of the image and also adversely affects the scene-to-reference illumination levels on the hologram recording medium. Minimization of the effects of smoke requires experimental determination of the optimum propellant geometry and the optimum delay time for recording the hologram during the burn.

## HOLOGRAM RECONSTRUCTION

During reconstruction, the developed hologram plate is reattached to the plate holder and placed into the holocamera box (which is mounted on a digitally controlled xyz stage). The plate is illuminated with a krypton-argon laser at an angle of approximately $60^{o}$ from normal, as shown in figure 2. The krypton laser operates at 647.1 nm, causing slight lateral demagnification of the image equal to the ratio of the reconstructing and recording wavelengths. A longitudinal distortion equal to the square of the wavelength ratio is also expected. The reconstruction laser wavelength was selected close to the ruby laser wavelength to minimize these effects. The real image of the hologram was focused onto a spinning mylar disk that was introduced to reduce speckle effects in the observed image. The spinning disk changes the speckle pattern at a rate faster than the response time of eye or imaging system causing a reduction in the contrast of the speckle pattern. A variable power microscope was used to view the reconstructed image either by eye or with the image scanner of the image processing system. Reconstructed images can be recorded by a 35mm camera from either the screen of the image processing system or from a camera attachment on the microscope. Photographs of typical reconstructed images are shown in figure 3.

## IMAGE PROCESSING EQUIPMENT

The Quantiment 720[4] is a general purpose television-type image analyzer that is capable of elementary shape recognition and various physical measurements of objects by distinguishing differences in grey levels in the image and performing various logical tests on measured dimensions. The system is designed in a modular fashion so that additional capabilities can be acquired with extra electronic modules. When used or configured as a 'basic' Quantimet 720, the operator must provide all control and direct all operations. In the 'advanced mode', a computer is used as a controller where all operations are programmed from prior experience. The Quantimet at NPS contains the necessary modules to be operated in the advanced mode but is currently being utilized in the basic mode.

Figure 4 is a block diagram of the image processor in the enhanced basic mode. All switch settings must be made on an interactive basis and data readings are made by the operator from the digital display on the screen.

The Scanner sends a video signal of of the image to the System Control Module where it is digitized and sent to the Variable Frame and Scale module. This module, when activated, enables an operator to select only a portion of the image for analysis, disregarding the rest of the image. The portion of the image of interest to the operator is forwarded to the 1-D Auto Detector module. This 1-D Auto Detector module can differentiate data based on grey level. There are 64 grey levels in an image and differentiation can be made of all levels above a certain

level, below a certain level, or between two levels. The threshold levels are under the operator control. Only data that passes the desired grey level test is passed to the other modules for further processing. The Light Pen module is used by the operator to select individual features for further measurements. The Frame Smasher module is of use only for long thin objects and is usually bypassed in our operations. The Standard Analyzer module can measure the selected features of the image. It can measure area, perimeter, largest horizontal dimension, largest vertical dimension, and other quantities. (All measurements are in units of pixels and image calibration is required to reduce the measurements to physical units.) The Standard Analyzer module can also be used to select features for further analysis based on the results of these measurements. For example, the analyzer can be used to select all image features whose horizontal (or vertical) size exceeds a certain value, whose area exceeds a given value, or whose dimensions (either vertical or horizontal) are less than a given value. The logical tests based on measured size can be combined with the logical tests performed by the 1-D Auto Detector module for further feature discrimination. The features that meet the combined specifications are sent to the Function Computer module and the Classifier/Collector module. These modules can perform more measurements on the features of interest or can perform still more logical tests on the dimensions. In the current configuration these units are not brought to bear on the feature measurement or discrimination problem.

In the 'automatic' mode (Fig. 5) a computer controls the setting of the module functions and the various threshold levels of the logical tests, as well as the recording of the data. Individual image frames can be transferred into the computer for data recording or subsequent analysis.

A standard image frame is 688 by 880 pixels. As described above, a subportion of this frame can be analyzed. The Scanner uses a Plumbicon tube selected for its uniformity of response over the complete face of the tube. The usual scan rate is 10 $s^{-1}$. Scan rates of 1 $s^{-1}$ and 0.4 $s^{-1}$ are switch selectable. The display screen is a long-persistence yellow phosphor that can accommodate the 10 $s^{-1}$ scan rate with a minimum of image loss before refreshing. The screen can present the raw image, the image as processed by the 1-D Auto detector, the image as processed by the Standard Analyzer, or any combination of these images. A digital readout on the top of the screen presents the quantitative data to the operator.

## PROBLEM AREAS

In this section we will describe several identified problems in this application of data reduction and potential solutions to them. The problems can be broken up into two parts: those that exist without the speckle being present and those that exist with speckle being present.

The first problem is to compute the number of locations that must be investigated in the hologram (i.e., we must compute the number of planes of interest that exist in the volume of the reconstruction). The technique of particle sizing requires that the system locate the planes of focus of the particles so that the particles can be accurately sized. One of the calculations of interest is to determine how many planes of best focus will exist in the hologram reconstruction. We will assume a nominal depth $\Delta z$ of 2 mm to the hologram reconstruction. The operating wavelength $\lambda$ is that of the krypton laser--647.1 nm. A particle of diameter, d, will have a depth of focus, $\Delta p$, given by

$$\Delta p \simeq \frac{d^2}{\lambda} \tag{1}$$

where the depth of focus is the distance over which the image of the particle will be 'in focus'. (This criterion is that the diameter of the image of the particle be within a factor of $(2)^{1/2}$ of its minimum in-focus value). The minimum number of planes, N, that must be investigated to count and size particles is given by

$$N = \frac{\Delta z}{\Delta p} \tag{2}$$

$$= \frac{\Delta z \, \lambda}{d^2} \tag{3}$$

Table 1 gives the value N for particles of differing diameters within the range of particle diameters expected in the experiment. As seen from the table the computational burden is not too great for particle sizes larger than 10 μm. As one goes below a size of 10 μm, however, the number of sample planes required increases rapidly. This is the region where speckle size also becomes important, as the size of the speckle is on the same order of magnitude as the diameter of the particle.

Stanton, Caulfield, and Stewart[5] present a technique for reducing the computational burden of finding the in-focus particle and increasing the accuracy of particle location by measuring the Fresnel ring structure of an out-of-focus spherical particle. This technique is not available to us since the Fresnel rings of the particle can not be seen against the speckle background. The particles are not identifiable in the image until the observation plane is close to the particle location.

The Quantimet 720 presents limitations which can lead to inaccurate results. One technique of separating particles from background is to accept for measurement only those pixels that that are darker than a certain threshold. Once the particle have been isolated, the particle size is measured. The 720 locates an

| d | Δp | N |
|---|---|---|
| 1 μm | 1.54 μm | 1,294 |
| 10 μm | 154 μm | 12.9 |
| 50 μm | 3.86 mm | 1 |
| 100 μm | 1.54 cm | 1 |
| 200 μm | 6.18 cm | 1 |

Table 1 Depth of focus, Δp, and number of independent viewing planes, N, in a 2 mm deep hologram volume

edge of a particle by noting regions where there is a sharp change in grey level. The edge location is determined by finding the pixels with greatest and least grey level and locating the edge at the pixel midway between these two locations. This technique is consistent only for particles with the same extremes in grey levels. For frames that include particles of differing grey levels, the edge location is variable. Uneven illumination is the primary cause of differences in particle grey level. The illumination problems can occur in the hologram recording (e.g., laser nonuniform beam pattern, smoke), in the development of the hologram leading to a plate with variable transmissivity (bleaching the plate would help this problem), and in the reconstruction process (e.g., uneven laser illumination, nonuniform spatial response of the image tube). Additionally electronic noise in the various modules and quantization noise can corrupt the image signal leading to measurement errors.

For the case of having speckle present as in our hologram reconstructions (due to the diffuse illumination required to eliminate the Schlieren fringes in the reconstruction as previously described), the initial point is to reduce the maximum size of the expected speckle to the smallest value possible. Speckle is the random interference pattern from a diffuse source interfering with a reference wave. The random pattern of light will contain all grey levels from maximum brightness to total black. The speckle can have two effects on the image. It produces black spots in the background which cannot be readily distinguished from real particles. The second effect is that the speckle can give the perimeter of the particle a 'swiss cheese' appearance where the speckle overlaps the edge. This alters any calculated measurements of the particle, such as area or perimeter. The Quantimet usually ignores any holes within the measured area, but significant error is introduced when the perimeter is altered.

In considering the size of the speckle in the image, we find that the speckle arises from two causes[6] within our images. The first occurs in the recording of the hologram. Objects illuminated with diffuse coherent light will have a speckle pattern superimposed on them with a maximum speckle size $d_{speckle}$ given by[6]

$$d_{speckle} = \frac{\lambda}{\beta \cos \theta} \tag{4}$$

where $\lambda$ is the laser wavelength, $\beta$ is the angle subtended by the illuminating beam as seen from the object (see figure 6), and $\theta$ is the angle measured at the object between the axis to the center of the illuminated diffuser and the center of the image plane (i.e., the hologram). For the geometry of the present experiment, $\lambda$=676 nm (a nominal wavelength between the recording laser and the reconstruction laser), $\beta$ is approximately 62.4 milliradians, and $\theta=180^{o}$, giving a speckle diameter on the hologram plane of 10.8 μm. This speckle will be recorded by the hologram and will be present in the reconstructed image. The primary means of reducing the speckle size is to increase the illumination aperture of the diffuser or to reduce the distance from the diffuser to the object.

The second contributor to the speckle in the image is the imaging lenses. In the present system there are two imaging operations in the reconstruction process. The first is the formation of the real image on the spinning mylar disk through the assisting lenses of the holocamera. The second is the imaging of the real image onto the face of the scanner tube through the microscope lenses. The maximum speckle diameter for a diffuse image that is imaged through a lens as depicted in figure 7 is[6]

$$d_{speckle} = \frac{1.22\lambda M}{2 \tan[\sin^{-1}(NA)]} \tag{5}$$

$$\simeq \frac{1.22\lambda M}{2 \tan[NA]} \tag{6}$$

where M is the magnification of the imaging system (given by the ratio of the image distance to the object distance) and NA is the numerical aperture of the lens. The numerical aperture of a microscope lens is approximately given by

$$NA \simeq (1/2f_{no}) \tag{7}$$

$$\simeq \tan^{-1}[d_{lens}/2d_0] \tag{8}$$

where $f_{no}$ is the f-number of the lens, $d_o$ is the object distance from the lens, and $d_{lens}$ is the diameter of the lens. Alternate forms of the equation for the maximum speckle diameter are

$$d_{speckle} = \frac{1.22\lambda d_I}{d_{lens}} \qquad (9)$$

$$d_{speckle} = 1.22\lambda(1+M)f_{no} \qquad (10)$$

The first imaging operation is the formation of the real image on the mylar disk from the hologram through the assisting lens set. Although the lens set is involved in the imaging, the primary imaging element is the hologram itself. The hologram can be modeled as a lens with (approximately) unity magnification. the aperture of the lens is the width of the hologram as modified by the assisting lenses. Further work is necessary to complete the modelling of this imaging process.

The second imaging operation is the imaging performed by the microscope objective onto the face of the scanner tube face. The maximum speckle size is given by equation 10 and is plotted vs. the f-number of the lens in figure 8 for a variety of magnifications. Reduction of the speckle diameter to values below 3 or 4 μm will require f-numbers below 0.4 for magnifications of 10x. For magnifications of 1x, f-numbers below 4 are adequate. It is noted that typical f-numbers are in the range of 1.5 to 10 for this range of magnifications, indicating that magnifications of 2x or so are consistent with reducing the speckle to values that are comparable to (or below) the value of the smallest expected particle.

Generally the conclusion is that, to reduce the speckle size, large aperture optics are desirable. Once the speckle is smaller than the typical particle size, the logic test based on the feature size can be implemented in the Quantimet to extract particle information from the background.

If the speckle cannot be made negligible compared to the particle size, other techniques must be used to reduce the contrast level of the speckle relative to the particle. These techniques are based on the fact that the speckle pattern will shift if one or more of many variables are changed while the object position remains fixed. By averaging N images with differing speckle patterns, an reduction in the speckle contrast on the order of $(N)^{-1/2}$ is expected. With reduction of contrast the speckle level can be reduced below the grey level threshold set in the 1-D Auto detector module of the Quantimet. Variables that can be changed to cause a shift in the speckle pattern are:

-Changing the random phase of the diffuse illuminating wave. This is done in our system by rotating the mylar disk that has the real image focussed on it. The speckle pattern changes during the integration time of the scanner tube. The improvement in contrast of the observed image (on the viewing screen) formed with a moving disk over that of a stationary disk is noticeable. The predicted improvement at

higher spin rates or longer integration times is less noticeable to the eye.

-Changing the image aperture. Since the Quantimet requires equal strength images for accurate particle sizing, this technique would require a renormalization of the image amplitudes. This might be possible when the system is in the advanced computer-controlled mode, but the technique holds little promise since one is limited by the limited dynamic range of the sensor to few images.

-Changing the object position or, equivalently, changing the image screen position or changing the imaging lens position). This can be done within the depth of focus of the particle. For small diameter particles few independent images could be expected.

-Computer superposition of images with the different diffuse illumination. This technique is similar to the rotating disk illuminator except that the superposition is done digitally rather than relying on the integration properties of the imaging tube. Limitations here are primarily in the memory capacity of the computer. Using the computer to store and manipulate the images also allows a variety of linear and nonlinear image processing algorithms to be used.

Each of these techniques introduces complexity into the processing of the image. The easiest to implement is the spinning diffuser in the image reconstruction. While the image is dramatically improved when the disk is spinning compared to the image on a motionless disk, the image quality is not dramatically improved with increased rotation rate. The techniques other than computer processing the images appear to present insurmountable problems, leaving the computer processing as the most likely solution. Work has begun on implementing the computer-controlled configuration in an effort to explore this technique.

## SUMMARY

The holographic technique has been successfully used to record particles from strand burns and 2-D motor combustion. (Work will soon be done on expanding the hologram recording to a 3-D motor environment) The image particle count and sizing has successfully been done by hand but automatic techniques are preferred. The diffuse illumination required in the recording process to avoid phase fringes due to thermal effects has led to the presence of speckle in the images. Efforts have been made to analyze the size of the speckle to reduce the maximum speckle diameter. The remaining speckle is reduced by using a spinning diffuser in the reconstruction process. The computer-processed images appear to have the most liklihood of further reduction f the speckle contrast. This method is currently under investigation.

## REFERENCES


1. R.G. Cramer, R.J. Edington, et al., 'An investigation of experimental techniques for obtaining particulate behavior in metallized solid propellant combustion', , Technical report AFRL TR-84-014, Air Force Rocket Propulsion Laboratory, Edwards AFB, CA 93523

2. R.A. Briones and R.F. Wuerker, 'Instruction manual for the improved ruby holographic illuminator', Technical report AFRL TM-78-11, Air Force Rocket Propulsion Laboratory, Edwards AFB CA 93523

3. R.F. Wuerker and R.A. Briones, 'Operation manual for the lens-assisted mulltipurpose holocamera with reflected light option', Technical report AFRL TM-78-12, Air Force Rocket Propulsion Laboratory, Edwards AFB CA 93523

4. Cambridge Instruments, 'Instruction manual for the Quantimet 720', 40 Pitt Dr., Monsey NY, 1976

5. A.C. Stanton, H.J. Caulfield, and G.W. Stewart, 'An approach for automated analysis of particle holograms', Optical Engineering, 23(5), pp. 577-582, 1984

6. M. Francon, Laser Speckle and Applications in Optics, pp. 33-34, Academic Press, 1979

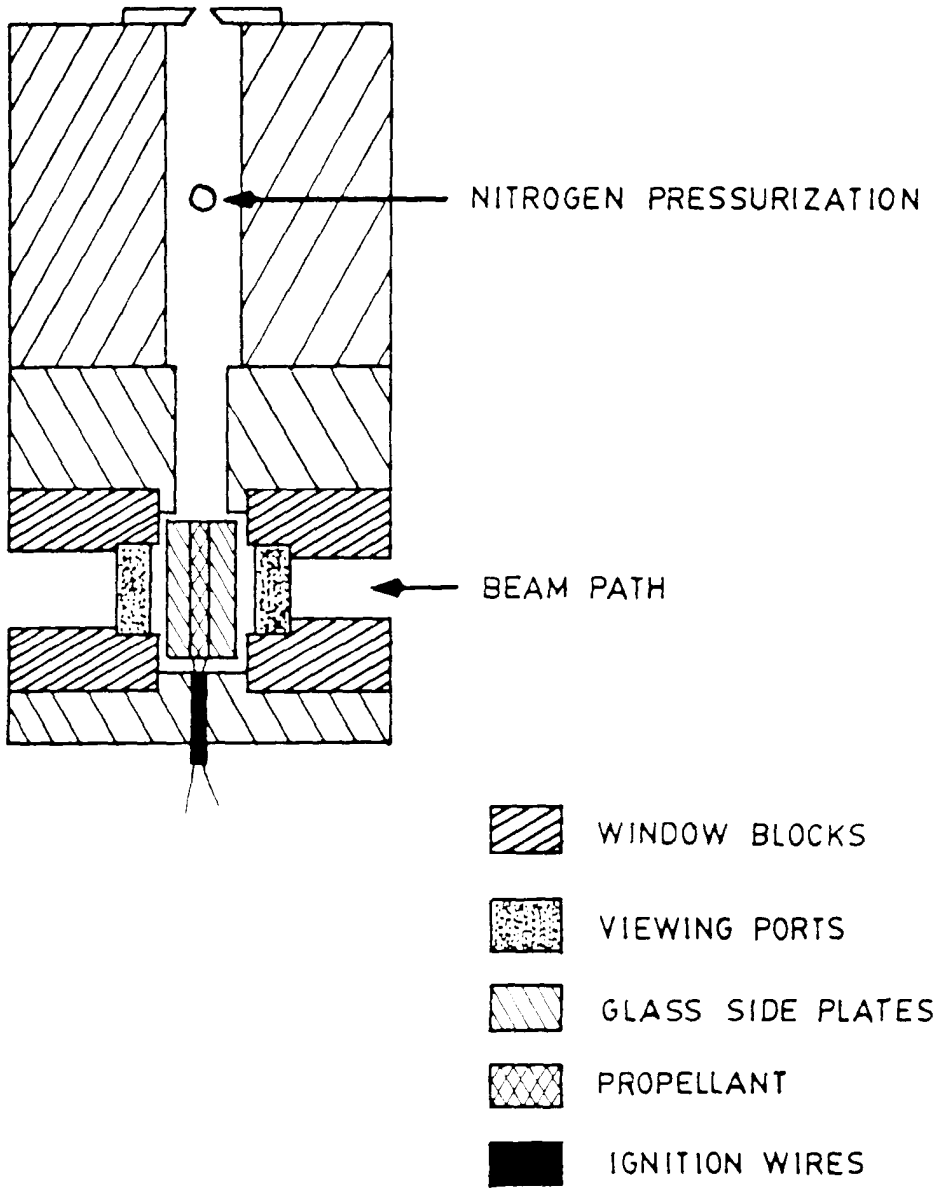


Figure 1. Schematic of 2-D Motor

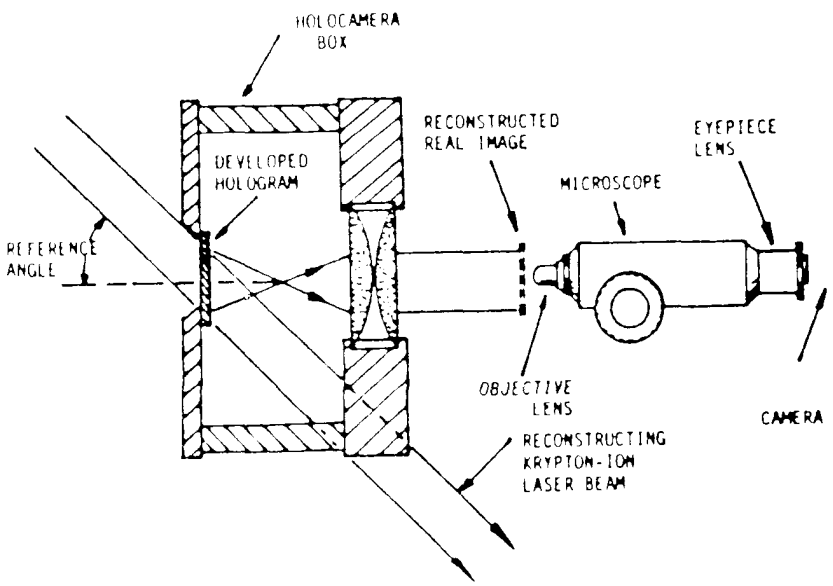


Figure 2. Schematic of Reconstruction Viewing Method (after Ref. 3)

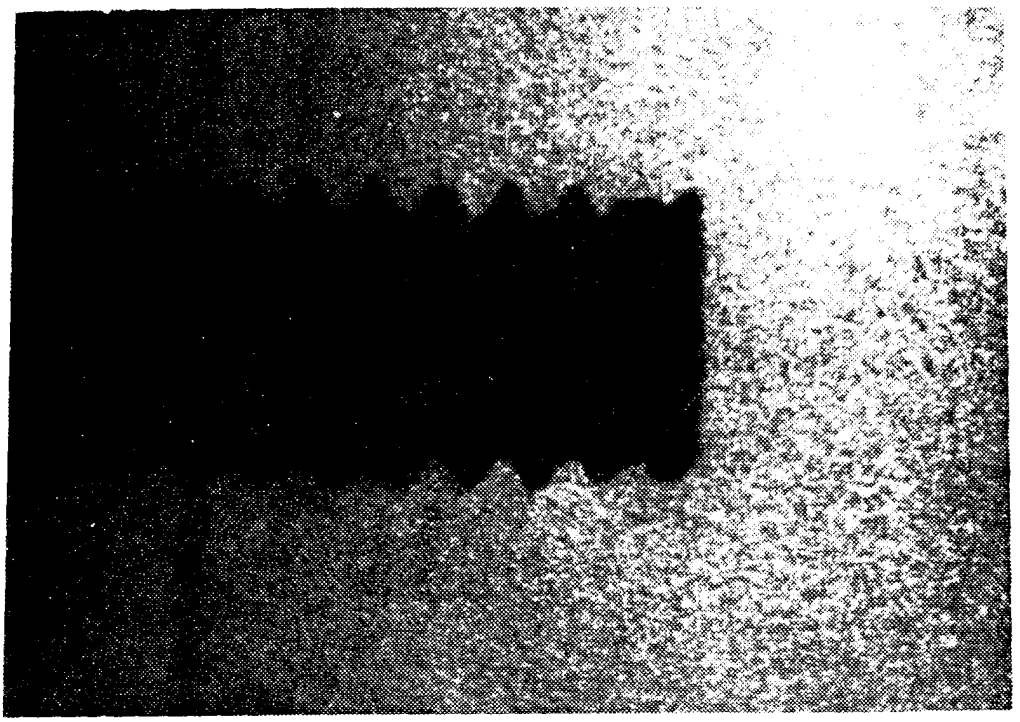

(a) 0-80 Screw

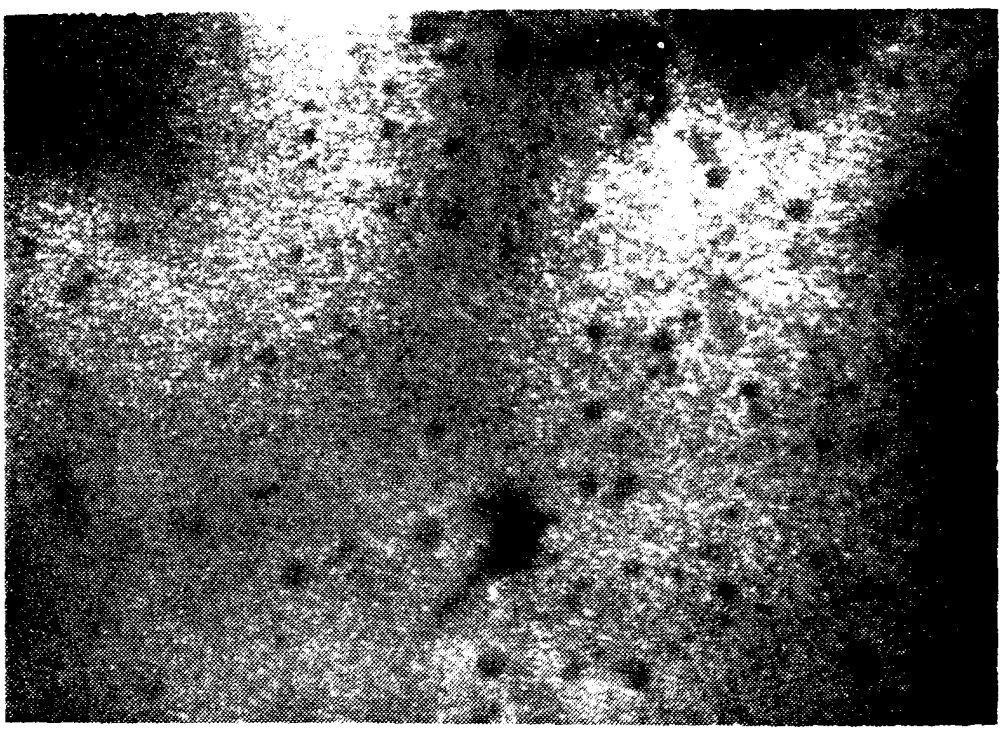

(b) WGS-ZrC

Figure 3 Photographs of Typical Reconstructed Images

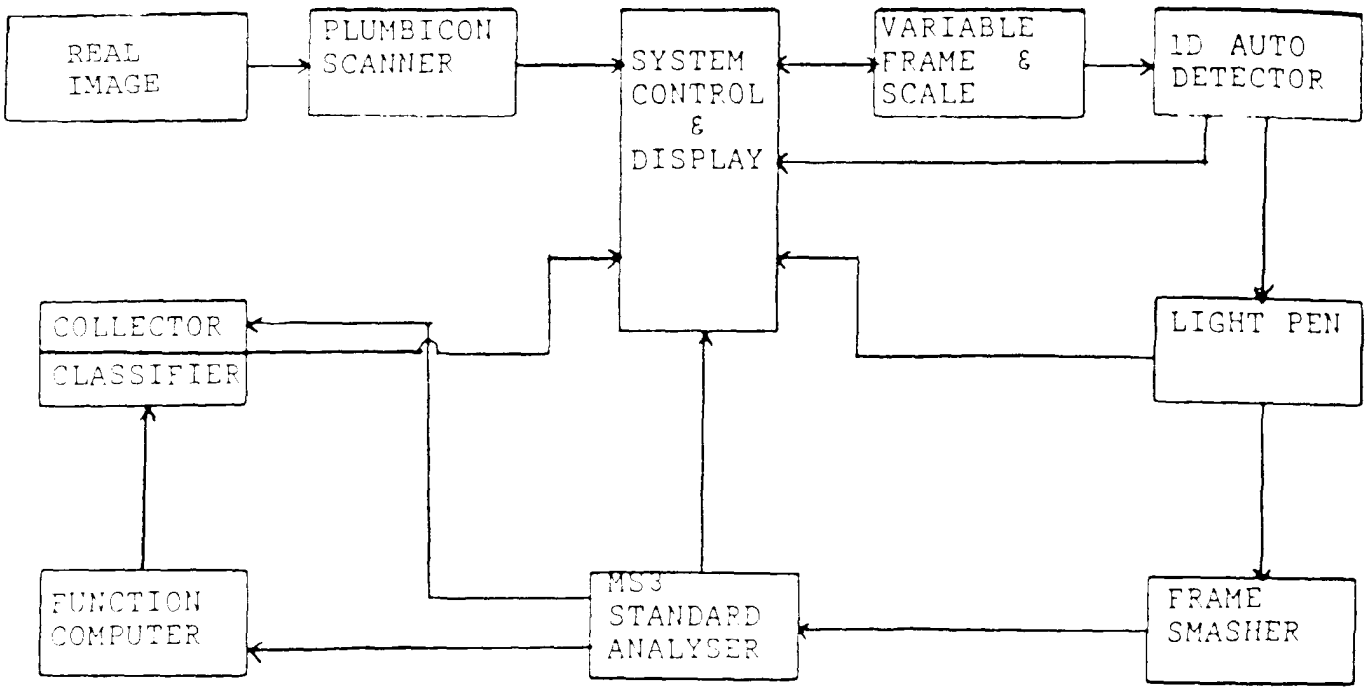


**Figure 4 Block Diagram of Quantimet 720 EnhancedBasic Configuration**

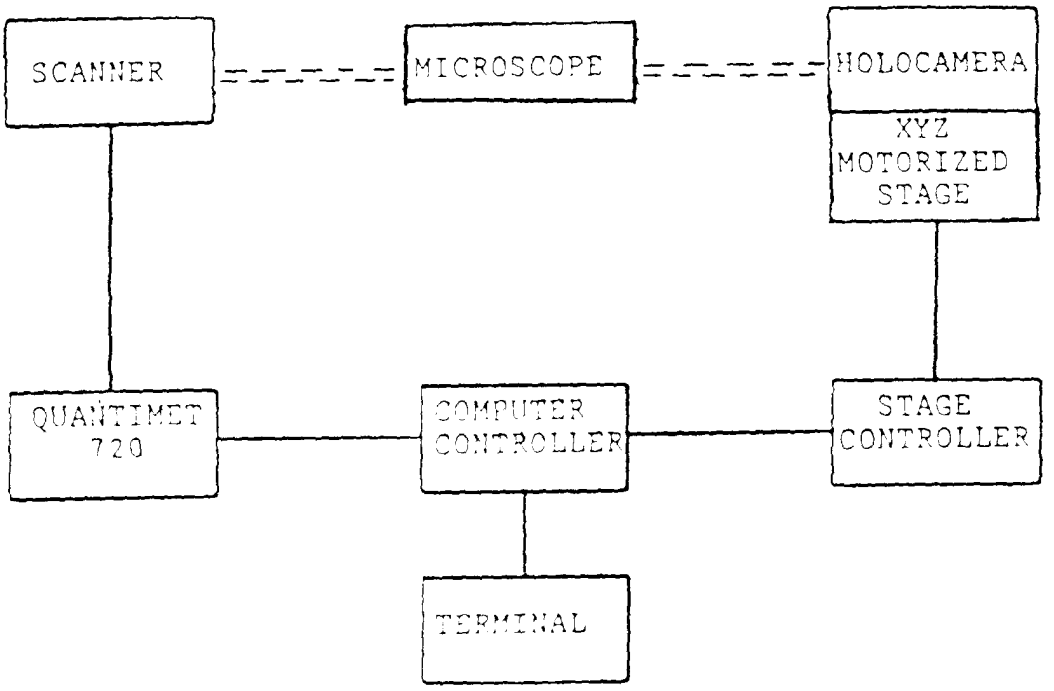


**Figure 5 Block Diagram of Semiautomatic Image Reconstruction Setup**

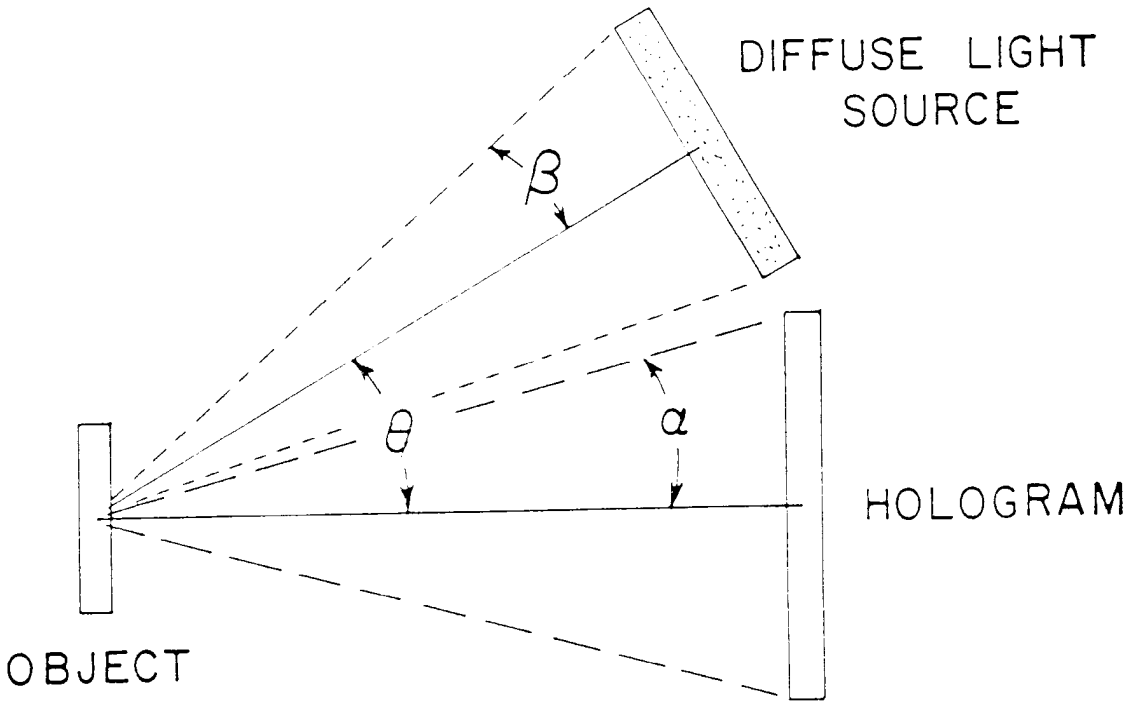


Figure 6. Geometry for Calculating Maximum Speckle Diameter Due to Diffuse Illuminator

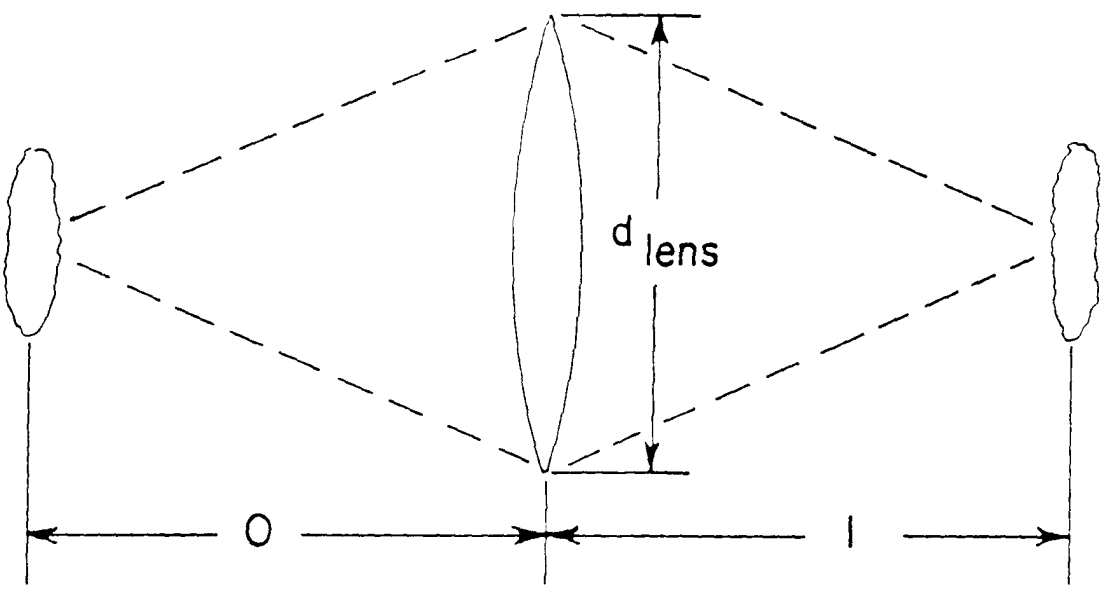


Figure 7. Geometry for Calculating Maximum Speckle Diameter in Imaging

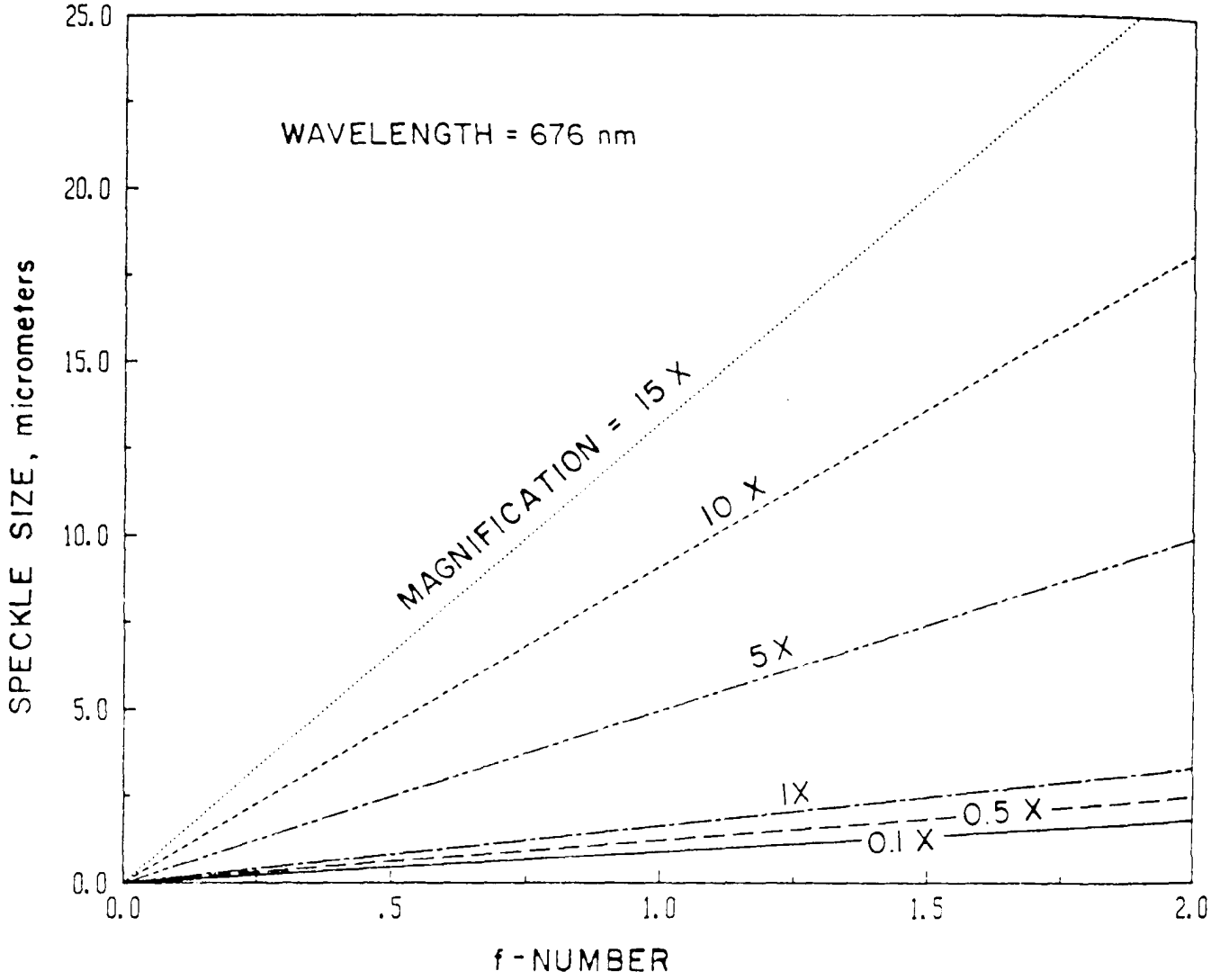


Figure 8. Maximum Speckle Diameter vs. Lens f-number and Magnification